willowlamp
EXTENDED

WELCOME

TO THE WORLD OF WILLOWLAMP

Flower of Life 1000 in brass | Seerose Resort & Spa | Switzerland

TABLE OF CONTENTS

1/3

INTRODUCTION 1
ABOUT ADAM HOETS 2
CUSTOM DESIGN 3

ART PIECES 8
COMPLEX CLASSICS 54
SIMPLE CLASSICS 134
SIMPLE LAMPS 191

CHOOSE THE PERFECT WILLOWLAMP 283
AGENTS AND TRADING PARTNERS 284
THE TEAM 285
AWARDS AND COLLABORATIONS 286

ART PIECES (CHANDELIERS)

HALO 10
THE LINK 14
GEOMETRIC STORM 17
LOTUS MANDALA 20
CRYSTAL MANDALA 24
MANDALA 28
SPIRAL NEBULA 32
ELLIPTICAL NEBULA 35
DROPLET 38
ENCHANTED FARAWAY TREE 42
ELONGATED FARAWAY TREE 47
SPIRAL TREES 50

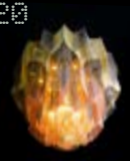
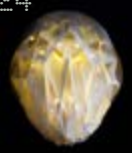

CHANDELIERS (COMPLEX CLASSICS)

COCOON 56
STREAMWAVE 59
RADIAL 62
LINEAL 65
WINDCHIME 67
BIGLOVE CLOVER 72
FARAWAY TREE 76
FLOWER OF LIFE 82
PROTEA 91
FUSCHIA 100
MOONFLOWER 104
ROSE 109
NGOMA DRUM 115
THREE-TIERED 121
ELLIPTICAL THREE-TIERED 130

TABLE OF CONTENTS

2/3

INTRODUCTION 1
ABOUT ADAM HOETS 2
CUSTOM DESIGN 3

ART PIECES 8
COMPLEX CLASSICS 54
SIMPLE CLASSICS 134
SIMPLE LAMPS 191

CHOOSE THE PERFECT WILLOWLAMP 283
AGENTS AND TRADING PARTNERS 284
THE TEAM 285
AWARDS AND COLLABORATIONS 286

WALL LAMPS (COMPLEX CLASSICS) 123

BIGLOVE CLOVER 72

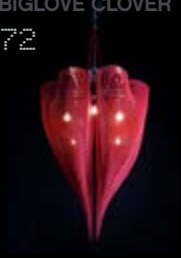

FARAWAY TREE 76

FLOWER OF LIFE 82

PROTEA 91

THREE-TIERED 121

WALL LAMPS (SIMPLE CLASSICS) 123

BABYLOVE CLOVER 145

MOROCCAN VASES 151

LONG LANTERNS 176

LANTERN 186

WALL LAMPS (SIMPLE LAMPS) 123

HALFPIPE 136

2 FOLDED CIRCLES 139

CIRCULAR CROPPED 193

CIRCULAR WILLOW 208

CIRCULAR POD 223

SCALLOPED CROPPED 234

SCALLOPED WILLOW 249

SCALLOPED LOOPED 264

TABLE OF CONTENTS

3/3

INTRODUCTION 1
ABOUT ADAM HOETS 2
CUSTOM DESIGN 3

ART PIECES 8
COMPLEX CLASSICS 54
SIMPLE CLASSICS 134
SIMPLE LAMPS 191

CHOOSE THE PERFECT WILLOWLAMP 283
AGENTS AND TRADING PARTNERS 284
THE TEAM 285
AWARDS AND COLLABORATIONS 286

PENDANTS (SIMPLE CLASSICS)
191

LOVE CLOVERS 145
MOROCCAN VASES 151
A-PEAL 165
SPIRAL PODS 169
EXTRA LONG POD 173
LONG LANTERNS 176
CROCUS 180
FRANGIPANI 183
LANTERN 186

PENDANTS (SIMPLE LAMPS)
191

CIRCULAR CROPPED 193
CIRCULAR WILLOW 208
CIRCULAR POD 223
SCALLOPED CROPPED 234
SCALLOPED WILLOW 249
SCALLOPED LOOPED 264
DOWNLIGHTER 'RETRO-FITS' 279

TABLE & STANDING LAMPS (SIMPLE LAMPS)
191

CIRCULAR CROPPED 193
CIRCULAR WILLOW 208
CIRCULAR POD 223
SCALLOPED CROPPED 234
SCALLOPED WILLOW 249
SCALLOPED LOOPED 264

SIMPLE IDEAS, BEAUTIFULLY EXECUTED

The willowlamp success story began with a single simple idea: the willowlamp notch system that allows curtains of ball-chain to flow elegantly from laser-cut steel frames. Today, our award-winning, cutting-edge designs bring life and light to large and small spaces all over the world.

Our original lighting designs are shaped by the principles of sacred geometry and built with world-class lighting technology, craftsmanship and superior materials to create timeless yet functional works of art.

When you invest in a willowlamp, it will be a true investment in style, creativity and individual expression.

The Southern Flame for Southern Guild 2018

ADAM HOETS - FOUNDER AND CREATIVE DIRECTOR

Adam Hoets is the founder and creative director of willowlamp. He is inspired by nature's sculptural forms. His designs are imbued with the beauty he sees everywhere.

His obsessive understanding of each design results in beautiful products that combine aesthetics and technical detail with a consistent quality found in every willowlamp, from the most breath-taking chandelier to a table lamp that is perfectly subtle in its simplicity.

Adam graduated as an architect from the University of Cape Town in 2000 and later specialised in designing sustainable buildings that integrate harmoniously into their surroundings with sculptural forms. Adam lives and works on the slopes of Table Mountain in Cape Town.

willowlamp is the next chapter in his journey as an artist and designer.

CUSTOM DESIGN

CUSTOM-DESIGN YOUR OWN WILLOWLAMP

Unleash your creativity and let your imagination fly to create the perfect willowlamp that represents your individual style.

Our custom willowlamp design service is ideal for creating a beautiful and striking impact on any room. We have created bespoke installations for hotels and private homes all over the world. Custom-made willowlamps can be large installations, one-off creations or limited editions. willowlamp's patented notch system is so simple yet so versatile, giving us the flexibility to give form to your individual ideas. We are able to design a light that brings life to any space, regardless of height, volume or shape.

When you design your own willowlamp it will be a true one-off that does not exist anywhere else in the world. When you invest in a willowlamp, it will be a true investment in style, creativity and individual expression.
Visit willowlamp.com for specifications, ordering processes, safety information and terms and conditions.

A massive 1000kg elliptical shaped Mandala for the Marriott Hotel, Charllotte, Virginia. 2020

EXAMPLES OF CUSTOM-DESIGN

A massive 400kg 2.8m diameter 6.5m long Flower of Life chandelier for the Mena-House Hotel in Egypt

A 16 tier version of our Enchanted Faraway Tree, with a colour gradient of different metallics

Custom Flower of Life 2,7m dia. in Chrome | Mena House Hotel | Giza, Egypt

Mandala Cluster | Crown Perth Hotel | Perth, Australia

Downlighter retrofit lampshade normally round can be made in any shape

The Pod, normally long and slender has been modified in proportion into a wide 'basket-like' form

Giant Fuschia 3.5m dia | Private Venue | Democratic Republic of Congo

MODIFIED EXISTING WILLOWLAMP

Here we literally stacked our 'flower of life' design to create a single large multiple level chandelier.

ORIGINAL CUSTOM DESIGN

A massive extruded geometric Islamic star pattern in various metallic chain finishes.

An Enchanted Forest | Private residence | London

ART PIECES

CHANDELIERS

INDEX
8

ART PIECES

CHANDELIERS

The nitrogen in our DNA, the calcium in our teeth, the iron in our blood, the carbon in our apple pies were made in the interiors of collapsing stars. We are made of starstuff. Carl Sagan,

HALO

THE LINK

GEOMETRIC STORM

LOTUS MANDALA

CRYSTAL MANDALA

MANDALA

SPIRAL NEBULA

ELLIPTICAL NEBULA

DROPLET

ENCHANTED FARAWAY TREE

ELONGATED FARAWAY TREE

SPIRAL TREES

HALO

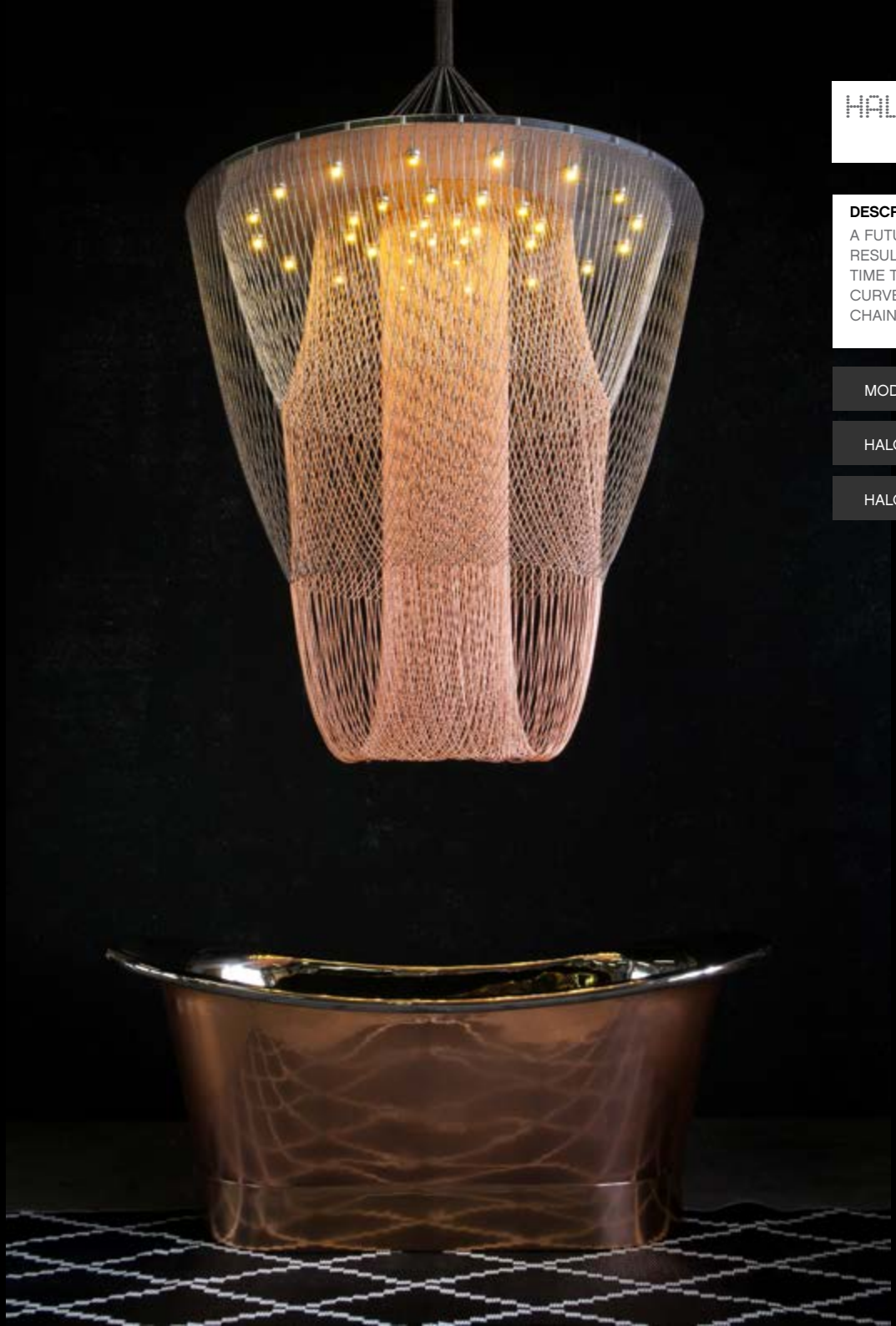

HALO

DESCRIPTION

A FUTURISTIC GHOSTLIKE SEMI TRANSPARENT FORM. THE SUCCESS OF THIS DESIGN RESULTS FROM AN INGENIOUS CLIP DEVICE WHICH HAS ENABLED US FOR THE FIRST TIME TO ATTACH THE BALL CHAIN TO ITSELF! THIS ALLOWS FOR DYNAMIC AND DISTORTED CURVES TO BE CREATED. THE IDEA IS INSPIRED BY ANTONI GAUDI WHO USED INVERTED CHAIN MODELS IN THE STRUCTURAL DESIGN FOR THE SAGRADA FAMILIA.

MODEL	SHADE SIZE	TOTAL HEIGHT
HALO - SUSPENDED - 1000	1000W X 1345H MM	1695MM
HALO - CEILING MOUNTED - 1000	1000W X 1070H MM	1090MM

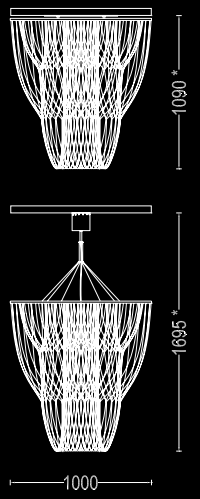

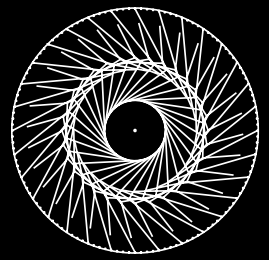

HALO | HALO - SUSPENDED - 1000 | HALO-1000-S

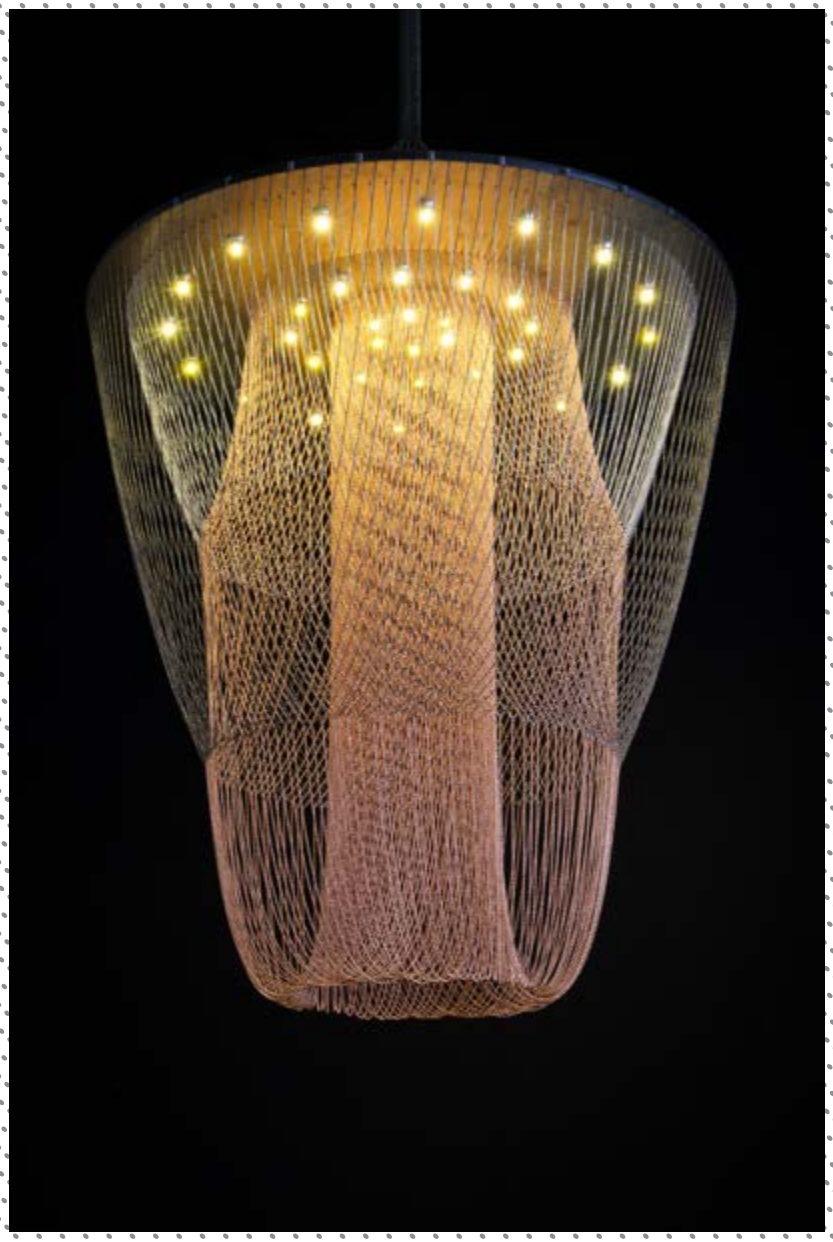

DESCRIPTION

A futuristic ghostlike semi transparent form. The success of this design results from an ingenious clip device which has enabled us for the first time to attach the ball chain to itself! This allows for dynamic and distorted curves to be created. The idea is inspired by Antoni Gaudi who used inverted chain models in the structural design for the Sagrada Familia.

PRODUCT SIZE

SHADE SIZE: 1000W X 1345H MM / TOTAL HEIGHT: 1695MM

PACKAGING DIMENSIONS

1140MM(W) X 1140MM(L) X 390MM(H)

LAMP TYPE & NO

35 X G4-LED 12V 2 WATT LAMPS (70W) LED ONLY

CLASS III
IP RATING 52
QC RATING 31

VOLTAGE RANGE
12V

PRODUCT MARKS & RATINGS

WEIGHT 31KG
PACKED WEIGHT 46KG

TECHNICAL DRAWING

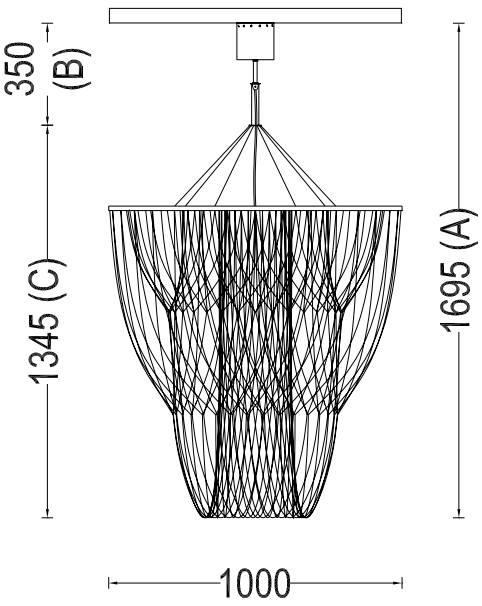

INTERACT

SELECT COLOUR

- SILVER *
- BRASS *
- COPPER *
- SMOKE *
- MIXED METALIC *
- RUST *
- WHITE
- RED
- BLACK

* METALLIC

CUSTOMISE DIMENSIONS

A
B

LAMP TYPE

QUANTITY

ADDITIONAL COMMENTS

WEB LINK | DOWNLOAD

HALO | HALO - CEILING MOUNTED - 1000 | HALO-1000-C

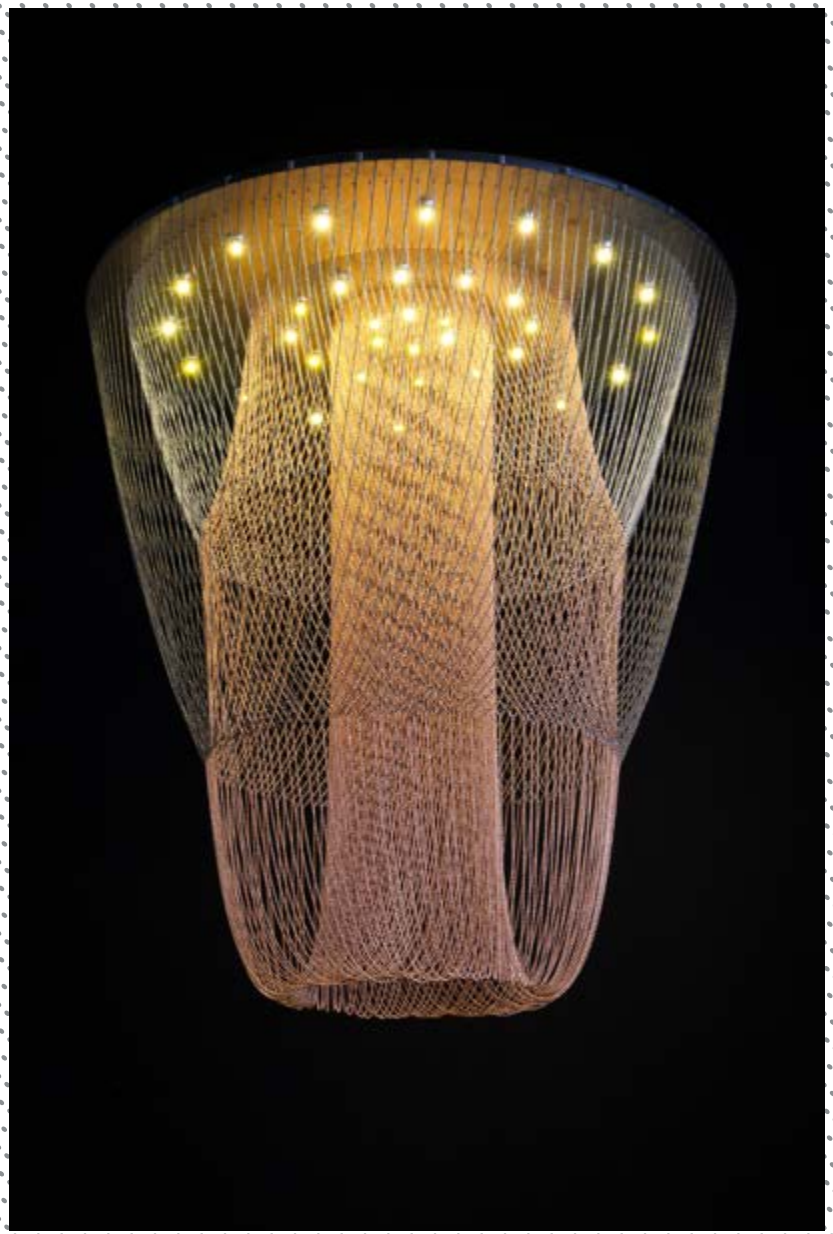

DESCRIPTION

A futuristic ghostlike semi transparent form. The success of this design results from an ingenious clip device which has enabled us for the first time to attach the ball chain to itself! This allows for dynamic and distorted curves to be created. The idea is inspired by Antoni Gaudi who used inverted chain models in the structural design for the Sagrada Familia.

PRODUCT SIZE

SHADE SIZE: 1000W X 1070H MM / TOTAL HEIGHT: 1090MM

PACKAGING DIMENSIONS

1140MM(W) X 1140MM(L) X 390MM(H)

LAMP TYPE & NO

35 X G4-LED 12V 2 WATT LAMPS (70W) LED ONLY

CLASS III
IP RATING 52
QC RATING 31

VOLTAGE RANGE
12V

PRODUCT MARKS & RATINGS CE

WEIGHT 31KG
PACKED WEIGHT 46KG

TECHNICAL DRAWING

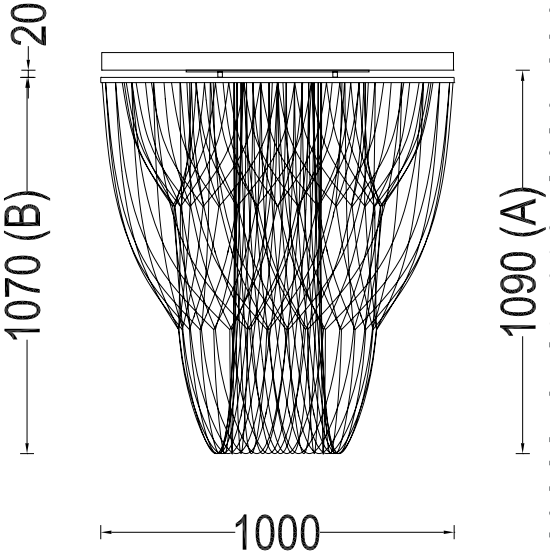

INTERACT

SELECT COLOUR

- SILVER *
- BRASS *
- COPPER *
- SMOKE *
- MIXED METALIC *
- RUST *
- WHITE
- RED
- BLACK

* METALLIC

CUSTOMISE DIMENSIONS

A
B

LAMP TYPE

QUANTITY

ADDITIONAL COMMENTS

WEB LINK DOWNLOAD

INDEX

THE LINK

THE LINK

DESCRIPTION

A DRAMATIC, GEOMETRIC SCULPTURAL DESIGN RESEMBLING ABSTRACTED GIANT LINKS OF CHAIN. THE USE OF TWO CHAIN TONES ENHANCES THE THREE DIMENSIONALITY OF THE ARTWORK. THE DESIGN IS CUSTOMIZABLE IN THAT ADDITIONAL LINKS MAY BE ADDED TO CREATE AN EVEN LONGER CHAIN. ILLUMINATED BY AN ARRAY OF G4 UFO LED'S

MODEL	SHADE SIZE	TOTAL HEIGHT
THE LINK - SUSPENDED - 1000	700x700W X 1610H MM	1845MM

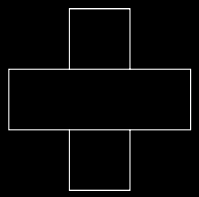

1-TIER

2-TIER

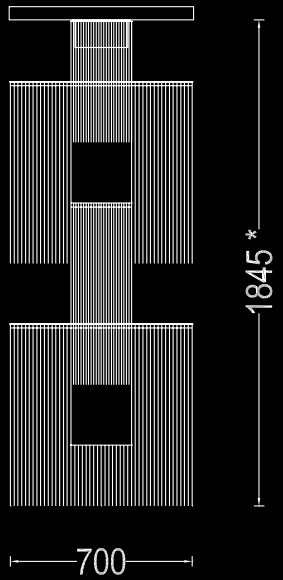

THE LINK | THE LINK - SUSPENDED - 1000 | LINK-700-S

DESCRIPTION

A dramatic, geometric sculptural design resembling abstracted giant links of chain. The use of two chain tones enhances the three dimensionality of the artwork. The design is customizable in that additional links may be added to create an even longer chain. Illuminated by an array of G4 UFO LED's

PRODUCT SIZE

SHADE SIZE: 700X700 X 1610H MM / TOTAL HEIGHT: 1845MM

PACKAGING DIMENSIONS

810MM(W) X 810MM(L) X 330MM(H)

LAMP TYPE & NO

36 X G4-LED 12V 2 WATT LAMPS (72W) LED ONLY

CLASS III
IP RATING 52
QC RATING 31

VOLTAGE RANGE
12V

PRODUCT MARKS & RATINGS

WEIGHT 34KG

PACKED WEIGHT 45KG

TECHNICAL DRAWING

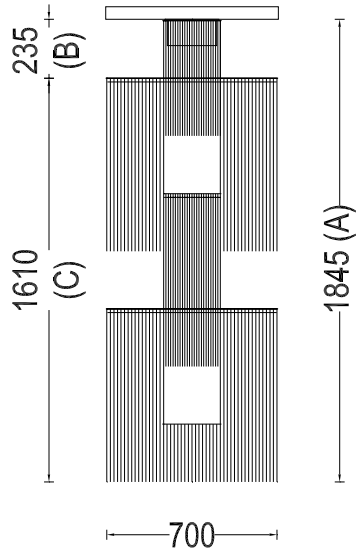

INTERACT

SELECT COLOUR

- SILVER *
- BRASS *
- COPPER *
- SMOKE *
- MIXED METALIC *
- RUST *
- WHITE
- RED
- BLACK

* METALLIC

CUSTOMISE DIMENSIONS

A
B

LAMP TYPE

QUANTITY

ADDITIONAL COMMENTS

WEB LINK DOWNLOAD

GEOMETRIC STORM

GEOMETRIC STORM

DESCRIPTION

THE GEOMETRIC STORM IS INSPIRED BY ABSTRACT ART MAINLY CUBISM AND LAYERED LANDSCAPES. IT EVOKES A HIGHLY GEOMETRICIZED LANDSCAPE FROM AN ALTERNATE ABSTRACT CUBIST REALITY. THIS VERSION IS A LIMITED EDITION OF 10 PIECES AND HAS A MIXTURE OF SMOKE AND SILVER CHAIN TO CREATE AN INTERPLAY OF SHADOW AND LIGHT. IT IS ILLUMINATED BY LED AND G4 HALOGEN/LED SYSTEMS

MODEL	SHADE SIZE	TOTAL HEIGHT
GEOMETRIC STORM - 1200X900	900X1200 X 1400H MM	2270MM

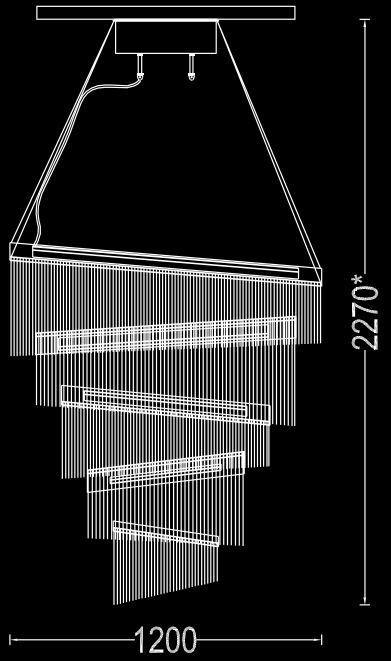

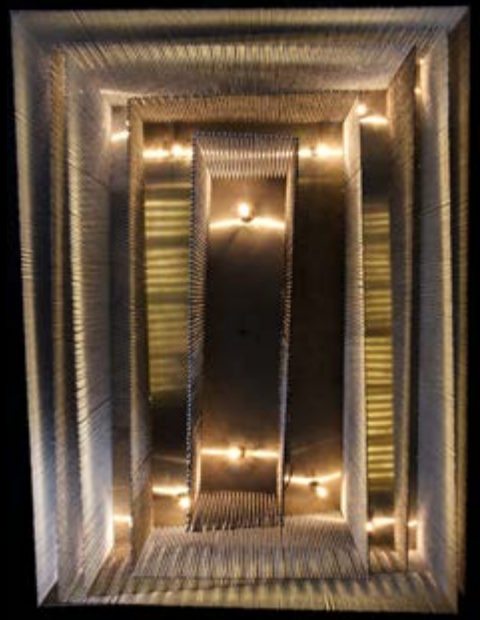

GEOMETRIC STORM | GEOMETRIC STORM - 1200X900 | GEOSTORM-1200-S

DESCRIPTION

A Geometric Rectilinear Art-Chandelier. Made from lasercut stainless steel frames, chrome plated or lacquered solid brass components, ballchain in several optional finishes. Illuminated by LED strip-lights and by 18 surface mounted G4 Halogen/LED lamps.

PRODUCT SIZE

SHADE SIZE: 900X1200 X 1400H MM / TOTAL HEIGHT: 2270MM

PACKAGING DIMENSIONS

1380MM(W) X 1080MM(L) X 430MM(H)

LAMP TYPE & NO

ELECTRICAL 1: 18 X G4-HALOGEN 12V 10 WATT LAMPS (180W) OR 18X G4-2W LEDS
ELECTRICAL 2: 11M LED STRIPLIGHT WW (50W)

CLASS LLI
IP RATING 52
QC RATING 21

VOLTAGE RANGE 12V

PRODUCT MARKS & RATINGS CE

WEIGHT 50KG
PACKED WEIGHT 80KG

TECHNICAL DRAWING

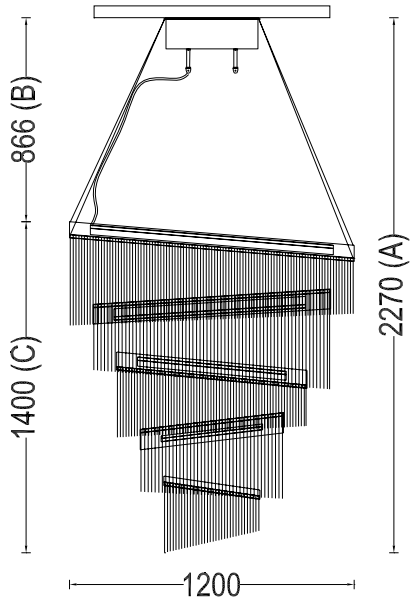

INTERACT

SELECT COLOUR

- SILVER *
- BRASS *
- COPPER *
- SMOKE *
- MIXED METALIC *
- RUST *
- WHITE
- RED
- BLACK

* METALLIC

CUSTOMISE DIMENSIONS

A
B
C

LAMP TYPE

QUANTITY

ADDITIONAL COMMENTS

WEB LINK DOWNLOAD

LOTUS MANDALA

LOTUS MANDALA

DESCRIPTION

AN EXTREMELY BEAUTIFUL SACRED LOTUS FLOWER MANDALA. ILLUMINATED BY 40 SURFACE MOUNTED AND SUSPENDED LED LAMPS.
OPTIONAL EXTRA: THE DESIGN FEATURES A MECHANISM THAT CAN CREATE A RIPPLING MOVEMENT IN THE CHAIN - ON SPECIAL REQUEST ONLY.

MODEL	SHADE SIZE	TOTAL HEIGHT
LOTUS MANADALA - SUSPENDED - 1000	1000W X 1085H MM	1590MM
LOTUS MANADALA - CEILING MOUNTED - 1000	1000W X 1080H MM	1100MM

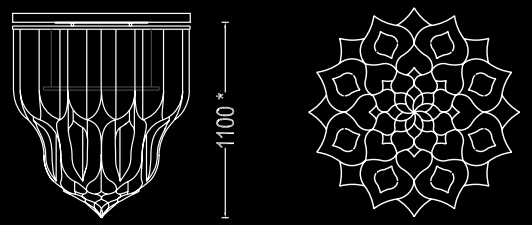

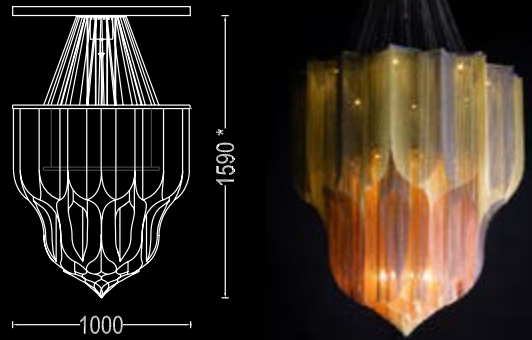

LOTUS MANDALA | LOTUS MANDALA - SUSPENDED - 1000 | MAND-LOTUS-1000-S

DESCRIPTION

An extremely beautiful sacred lotus flower mandala. Illuminated by 40 surface mounted and suspended LED Lamps.

PRODUCT SIZE

SHADE SIZE: 1000W X 1085H MM / TOTAL HEIGHT: 1590MM

PACKAGING DIMENSIONS

1140MM(W) X 1140MM(L) X 390MM(H)

LAMP TYPE & NO

40 X G4-LED 12V 2 WATT LAMPS (80W) LED ONLY

CLASS III
IP RATING 52
QC RATING 31

VOLTAGE RANGE
12V

PRODUCT MARKS & RATINGS

WEIGHT 60KG

PACKED WEIGHT 77KG

TECHNICAL DRAWING

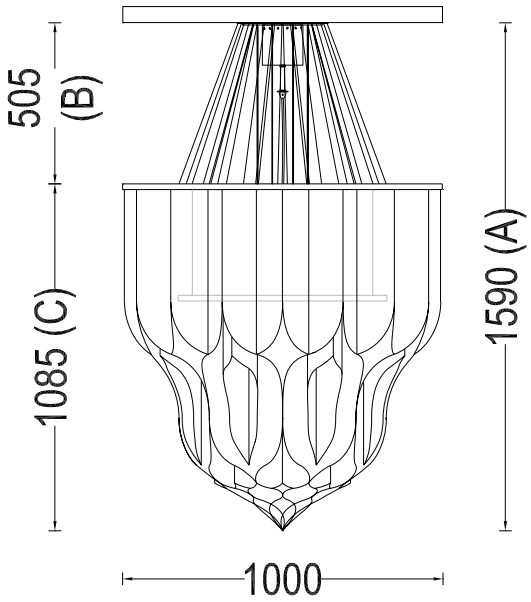

INTERACT

SELECT COLOUR

- SILVER *
- BRASS *
- COPPER *
- SMOKE *
- MIXED METALIC *
- RUST *
- WHITE
- RED
- BLACK

* METALLIC

CUSTOMISE DIMENSIONS

A
B

LAMP TYPE

QUANTITY

ADDITIONAL COMMENTS

WEB LINK DOWNLOAD

INDEX

LOTUS MANDALA | LOTUS MANDALA - CEILING MOUNTED - 1000 | MAND-LOTUS-1000-C

DESCRIPTION

An extremely beautiful sacred lotus flower mandala. Illuminated by 40 surface mounted and suspended LED Lamps.

PRODUCT SIZE

SHADE SIZE: 1000W X 1080H MM / TOTAL HEIGHT: 1100MM

PACKAGING DIMENSIONS

1140MM(W) X 1140MM(L) X 390MM(H)

LAMP TYPE & NO

40 X G4-LED 12V 2 WATT LAMPS (80W) LED ONLY

CLASS III
IP RATING 52
QC RATING 31

VOLTAGE RANGE
12V

PRODUCT MARKS & RATINGS

CE

WEIGHT 60KG

PACKED WEIGHT 77KG

TECHNICAL DRAWING

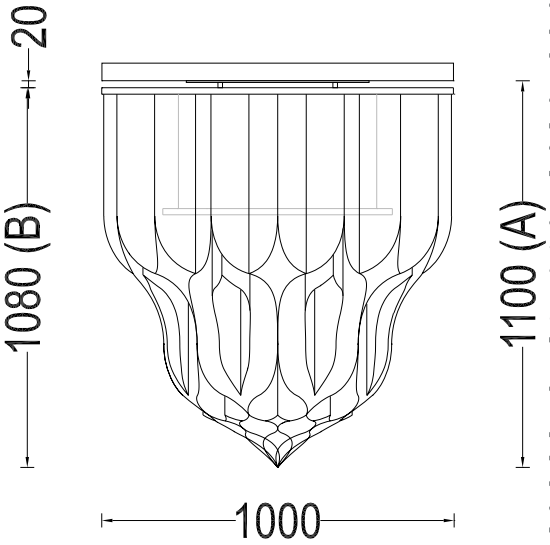

INTERACT

SELECT COLOUR

- SILVER *
- BRASS *
- COPPER *
- SMOKE *
- MIXED METALIC *
- RUST *
- WHITE
- RED
- BLACK

* METALLIC

CUSTOMISE DIMENSIONS

A
B

LAMP TYPE

QUANTITY

ADDITIONAL COMMENTS

WEB LINK DOWNLOAD

INDEX

CRYSTAL MANDALA

CRYSTAL MANDALA

DESCRIPTION

A SLEEKER SIMPLIFIED CRYSTALLINE VERSION OF THE MANDALA NO.1. ILLUMINATED BY 42 SURFACE MOUNTED AND SUSPENDED LED LAMPS.
OPTIONAL EXTRA: THE DESIGN FEATURES A MECHANISM THAT CAN CREATE A RIPPLING MOVEMENT IN THE CHAIN - ON SPECIAL REQUEST ONLY.

MODEL	SHADE SIZE	TOTAL HEIGHT
CRYSTAL MANDALA - SUSPENDED - 1000	1000W X 1225H MM	1725MM
CRYSTAL MANDALA - CEILING MOUNTED - 1000	1000W X 1220H MM	1240MM

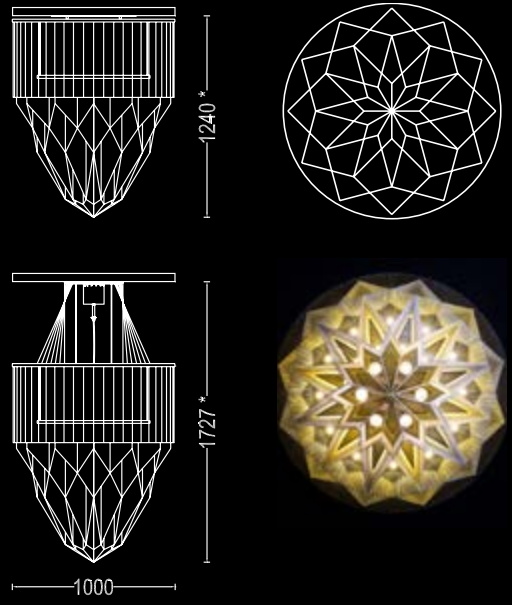

CRYSTAL MANDALA | CRYSTAL MANDALA - SUSPENDED - 1000 | MAND-CRYST-1000-S

DESCRIPTION

A sleeker simplified Crystalline version of the mandala No.1. Illuminated by 42 surface mounted and suspended LED Lamps.

PRODUCT SIZE

SHADE SIZE: 1000W X 1225H MM / TOTAL HEIGHT: 1725MM

PACKAGING DIMENSIONS

1140MM(W) X 1140MM(L) X 390MM(H)

LAMP TYPE & NO

42 X G4-LED 12V 2 WATT LAMPS (84W) LED ONLY

CLASS III
IP RATING 52
QC RATING 31

VOLTAGE RANGE
12V

PRODUCT MARKS & RATINGS CE

WEIGHT 72KG

PACKED WEIGHT 89KG

TECHNICAL DRAWING

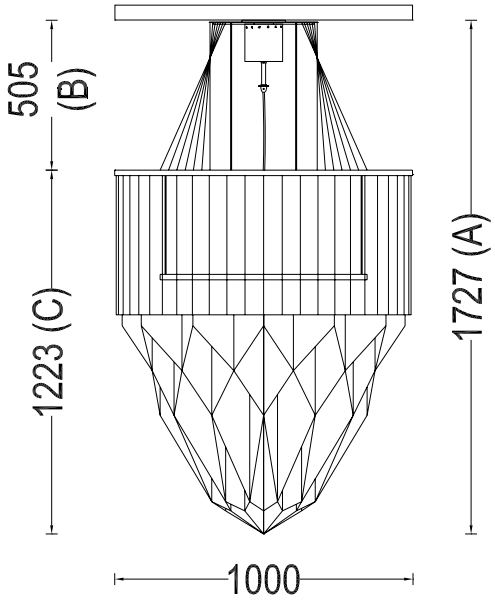

INTERACT

SELECT COLOUR

- SILVER *
- BRASS *
- COPPER *
- SMOKE *
- MIXED METALIC *
- RUST *
- WHITE
- RED
- BLACK

* METALLIC

CUSTOMISE DIMENSIONS

A
B

LAMP TYPE

QUANTITY

ADDITIONAL COMMENTS

WEB LINK DOWNLOAD

CRYSTAL MANDALA | CRYSTAL MANDALA - CEILING MOUNTED - 1000 | MAND-CRYST-1000-C

DESCRIPTION

A sleeker simplified Crystalline version of the mandala No.1. Illuminated by 42 surface mounted and suspended LED Lamps.

PRODUCT SIZE

SHADE SIZE: 1000W X 1220H MM / TOTAL HEIGHT: 1240MM

PACKAGING DIMENSIONS

1140MM(W) X 1140MM(L) X 390MM(H)

LAMP TYPE & NO

42 X G4-LED 12V 2 WATT LAMPS (84W) LED ONLY

CLASS III
IP RATING 52
QC RATING 31

VOLTAGE RANGE
12V

PRODUCT MARKS & RATINGS

CE

WEIGHT 72KG

PACKED WEIGHT 89KG

TECHNICAL DRAWING

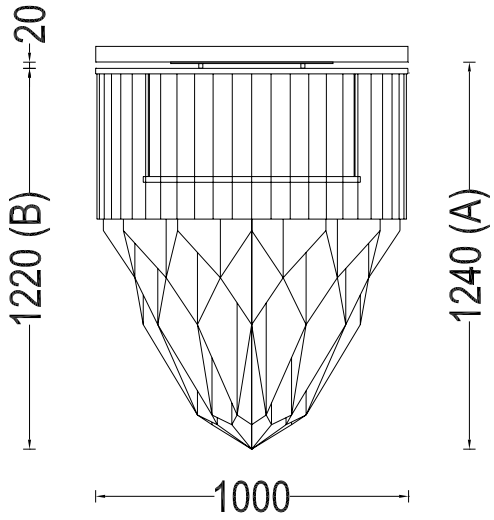

INTERACT

SELECT COLOUR

- SILVER *
- BRASS *
- COPPER *
- SMOKE *
- MIXED METALIC *
- RUST *
- WHITE
- RED
- BLACK

* METALLIC

CUSTOMISE DIMENSIONS

A
B

LAMP TYPE

QUANTITY

ADDITIONAL COMMENTS

WEB LINK DOWNLOAD

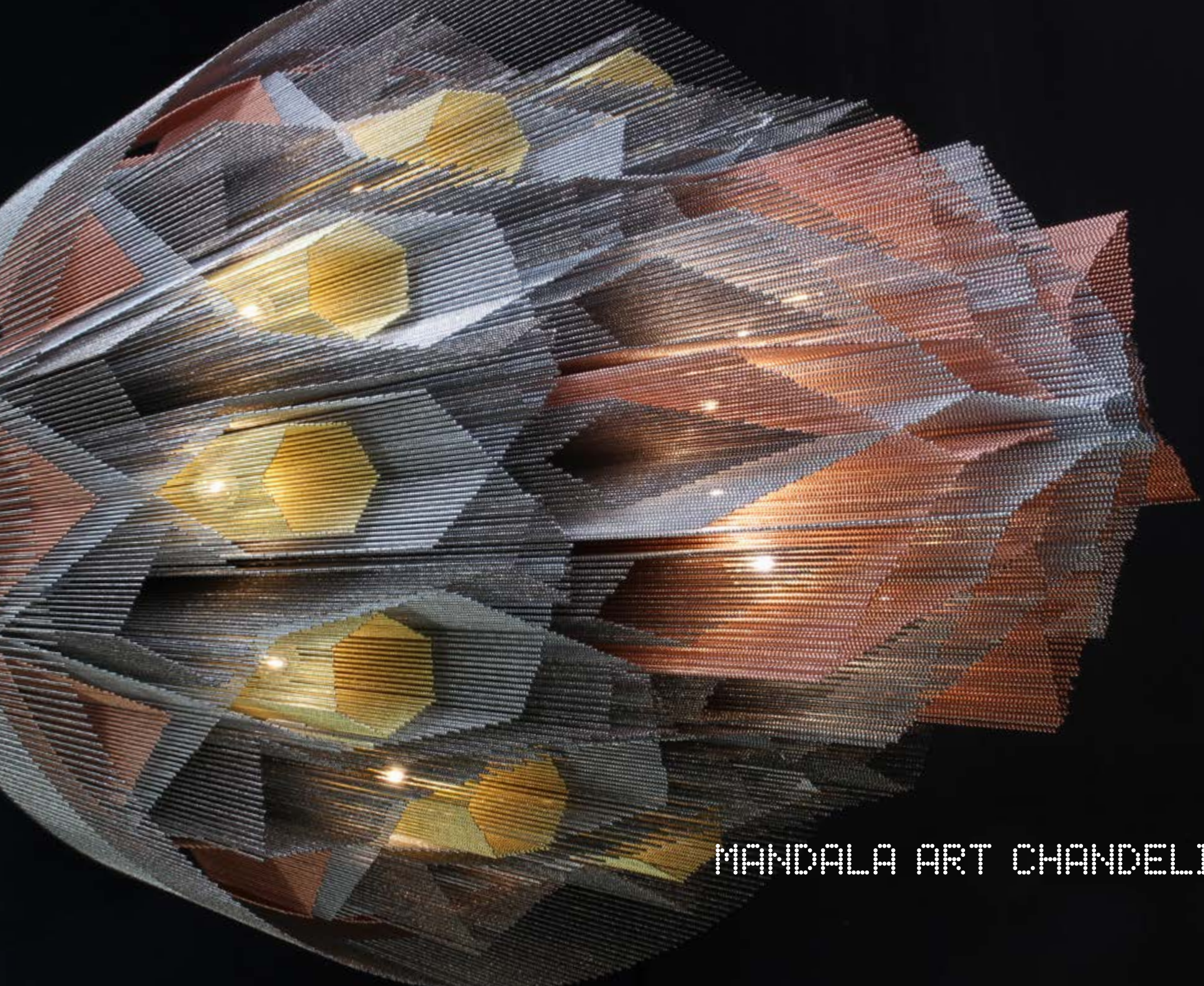

MANDALA ART CHANDELIER

MANDALA ART CHANDELIER

DESCRIPTION

A MASSIVE, INTENSE ILLUMINATED MANDALA SCULPTURE INSPIRED BY ISLAMIC PATTERNS WHICH HAVE BEEN TRANSLATED INTO THREE DIMENSIONS BY EXTRUDING THE COMPLEX INTERLOCKING GEOMETRY. MADE FROM LASER CUT STAINLESS STEEL FRAMES, CHROME PLATED OR LACQUERED SOLID BRASS COMPONENTS, BALLCHAIN IN SEVERAL OPTIONAL FINISHES. ILLUMINATED BY SUSPENDED G4 HALOGEN/LED LAMPS.

MODEL	SHADE SIZE	TOTAL HEIGHT
MANDALA NO.1 - 1000	1000W X 1920H MM	2200MM
MANDALA NO.2 - 1000MM DIA	1000W X 500H MM	1400MM

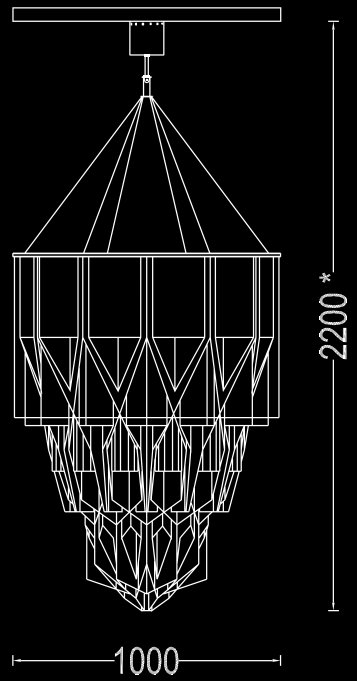

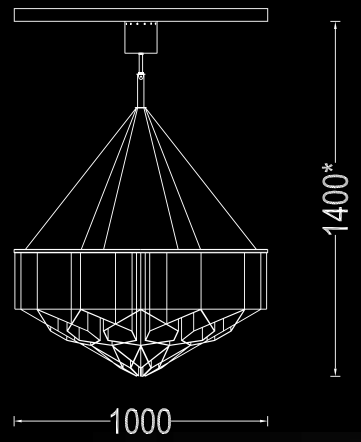

MANDALA NO.1 | MANDALA NO.1 - 1000 | MAND-NO1-1000-S

DESCRIPTION

A massive intense Illuminated Mandala sculpture inspired by Islamic patterns which have been translated into three dimensions through the extrusion of the complex interlocking geometry. Made from lasercut stainless steel frames, chrome plated or lacqured solid brass components, ballchain in several optional finishes. Illuminated by suspended G4 Halogen/LED lamps.

PRODUCT SIZE

SHADE SIZE: 1000W X 1920H MM / TOTAL HEIGHT: 2200MM

PACKAGING DIMENSIONS

1140MM(W) X 1140MM(L) X 390MM(H)

LAMP TYPE & NO

24 X G4-HALOGEN 12V 10 WATT LAMPS (240W) OR
24X G4-2W-LEDS

CLASS III
IP RATING 52
QC RATING 21

VOLTAGE RANGE
12V

PRODUCT MARKS & RATINGS

WEIGHT 125KG

PACKED WEIGHT 133KG

TECHNICAL DRAWING

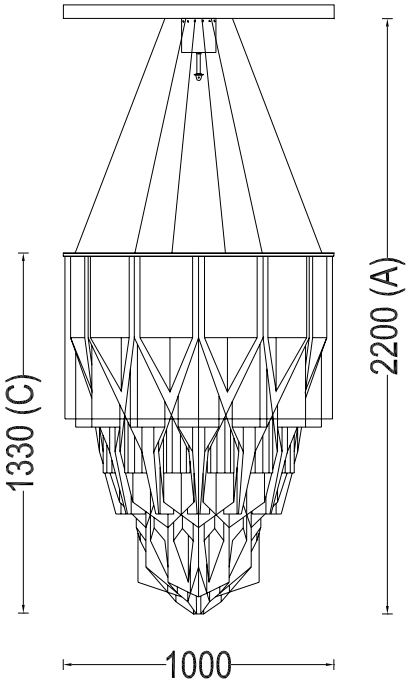

INTERACT

SELECT COLOUR

- SILVER *
- BRASS *
- COPPER *
- SMOKE *
- MIXED METALIC *
- RUST *
- WHITE
- RED
- BLACK

* METALLIC

CUSTOMISE DIMENSIONS

A
B
C

LAMP TYPE

QUANTITY

ADDITIONAL COMMENTS

WEB LINK **DOWNLOAD**

MANDALA NO.2 | MANDALA NO.2 1000MM DIA | MAND-NO2-1000-S

DESCRIPTION

A massive intense Illuminated Mandala sculpture inspired by Islamic patterns which have been translated into three dimensions through the extrusion of the complex interlocking geometry. Made from lasercut stainless steel frames, chrome plated brass components, ballchain. Illuminated by a combination of surface mounted and suspended G4 Halogen lamps. Mandala No.2 is a 'shallower' version than Mandala No.1 with a more evident pattern from any angle

PRODUCT SIZE

SHADE SIZE: 1000W X 500H MM / TOTAL HEIGHT: 1400MM

PACKAGING DIMENSIONS

1140MM(W) X 1140MM(L) X 390MM(H)

LAMP TYPE & NO

24 X G4-HALOGEN 12V 10 WATT LAMPS (240W) OR
24X G4-2W-LEDS

CLASS III
IP RATING 52
QC RATING 21

VOLTAGE RANGE
12V

PRODUCT MARKS & RATINGS CE

WEIGHT 45KG
PACKED WEIGHT 60KG

TECHNICAL DRAWING

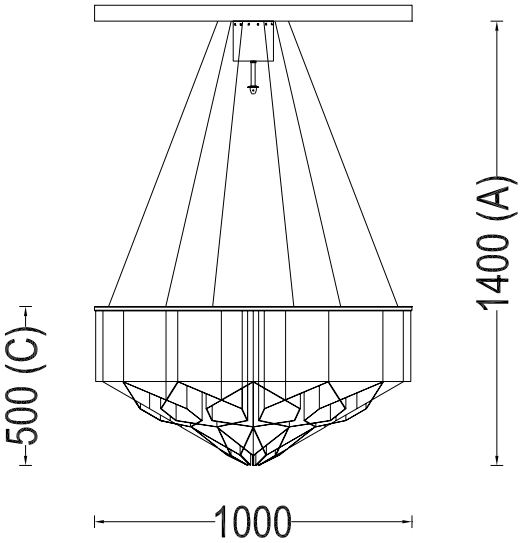

INTERACT

SELECT COLOUR

- SILVER *
- BRASS *
- COPPER *
- SMOKE *
- MIXED METALIC *
- RUST *
- WHITE
- RED
- BLACK

* METALLIC

CUSTOMISE DIMENSIONS

A
B
C

LAMP TYPE

QUANTITY

ADDITIONAL COMMENTS

WEB LINK DOWNLOAD

SPIRAL NEBULA

SPIRAL NEBULA

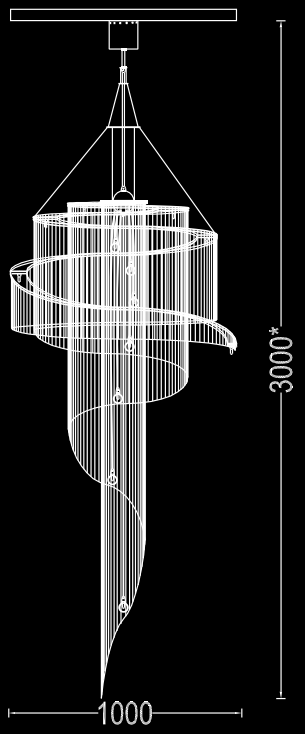

DESCRIPTION

A COLLECTION OF ILLUMINATED SCULPTURAL ART FORMS INSPIRED BY THE SPIRAL FORMS FOUND IN NATURE. THESE FORMS ARE MANIFEST IN THE MICRO AND MACRO COSMOS… FROM SEASHELLS TO SPIRAL NEBULA GALAXIES. THE DESIGNS ARE CHARACTERISED BY WINDING METAL SPIRALS THAT ARE WEIGHTED DOWN BY THE CHAIN AND ILLUMINATED BY A COMBINATION OF G4 HALOGEN AND LED LIGHTING SYSTEMS. THEY CAN BE TAILORED ON REQUEST AND CUSTOMISED TO THE SPECIFIC NEEDS OF THEIR ENVIRONMENT.

MODEL	SHADE SIZE	TOTAL HEIGHT
SPIRAL NEBULA - 1000	1000W X 2200H MM	3000MM

NEBULA | SPIRAL NEBULA - 1000 | SPI-NEB-1000-S

DESCRIPTION

A Spiraling art-chandelier inspired by a holographic image of a cone shell. Made from lasercut stainless steel frames, chrome plated or lacqured solid brass components, ballchain in several optional finishes. Illuminated by 3 electrical systems. Two are G4-Halogen based and the other is a 5m long LED striplight. Ideal for a large volumous space or a stairwell.

PRODUCT SIZE

SHADE SIZE: 1000W X 2200H MM / TOTAL HEIGHT: 3000MM

PACKAGING DIMENSIONS

1140MM(W) X 1140MM(L) X 300MM(H)

LAMP TYPE & NO

ELECTRICAL 1: 7 X G4-HALOGEN 12V 20 WATT LAMPS (140W) OR 7X G4-2W-LEDS. ELECTRICAL 2: 14 X G4-HALOGEN 12V 10 WATT LAMPS (140W) OR 14X G4-2W-LEDS. ELECTRICAL 3: 5M LED STRIPLIGHT WW (25W)

CLASS III
IP RATING 52
QC RATING 21

VOLTAGE RANGE
12V

PRODUCT MARKS & RATINGS

CE

WEIGHT 31KG

PACKED WEIGHT 45KG

TECHNICAL DRAWING

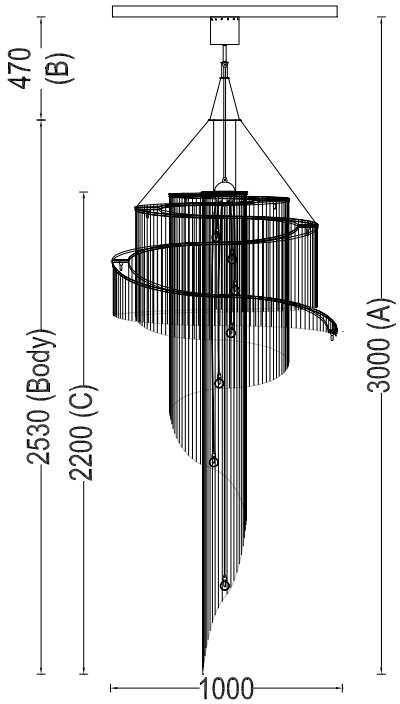

INTERACT

SELECT COLOUR

- SILVER *
- BRASS *
- COPPER *
- SMOKE *
- MIXED METALIC *
- RUST *
- WHITE
- RED
- BLACK

* METALLIC

CUSTOMISE DIMENSIONS

A
B
C

LAMP TYPE

QUANTITY

ADDITIONAL COMMENTS

WEB LINK **DOWNLOAD**

INDEX

ELLIPTICAL NEBULA

ELLIPTICAL NEBULA

DESCRIPTION

A COLLECTION OF ILLUMINATED SCULPTURAL ART FORMS INSPIRED BY SPIRAL PREVALENT THROUGHOUT NATURE. THESE FORMS ARE MANIFEST IN THE MICRO AND MACRO COSMOS… FROM SEASHELLS TO SPIRAL NEBULA GALAXIES.

THE DESIGNS ARE CHARACTERIZED BY WINDING METAL SPIRALS THAT COLLAPSE UNDER THE WEIGHT OF THE CHAIN AND ILLUMINATED BY A COMBINATION OF G4 HALOGEN AND/OR LED LIGHTING SYSTEMS.

THEY CAN ON REQUEST, BE TAILORED AND CUSTOMISED TO THE SPECIFIC NEEDS OF THEIR ENVIRONMENT.

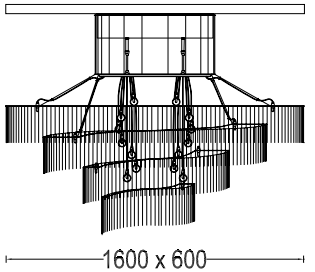

MODEL	SHADE SIZE	TOTAL HEIGHT
ELLIPTICAL NEBULA - 1600X600	1600X600W X 700H MM	1200MM

NEBULA | ELLIPTICAL NEBULA - 1600X600 | ELLI-NEB-1600-S

DESCRIPTION

Elongated spiraling art-chandelier inspired by galaxies. Made from lasercut stainless steel frames, chrome plated or lacqured, solid brass components, ballchain in several optional finishes. Illuminated by 20W G4-Halogen electrical systems one with 12 suspended glass balls and another with 20 surface mounted lamps on the spiraling metal frame. Ideal for a linear space or over a long table.

PRODUCT SIZE

SHADE SIZE: 1600X600W X 700H MM / TOTAL HEIGHT: 1200MM

PACKAGING DIMENSIONS

1760MM(W) X 800MM(L) X 390MM(H)

LAMP TYPE & NO

ELECTRICAL 1: 12 X G4-HALOGEN 12V 10 WATT (120W) OR 12X G4-2W-LEDS. ELECTRICAL 2: 20 X G4-HALOGEN 12V 10 WATT (200W) OR 20X G4-2W-LEDS

CLASS III
IP RATING 52
QC RATING 21

VOLTAGE RANGE
12V

PRODUCT MARKS & RATINGS

WEIGHT 23KG
PACKED WEIGHT 40KG

TECHNICAL DRAWING

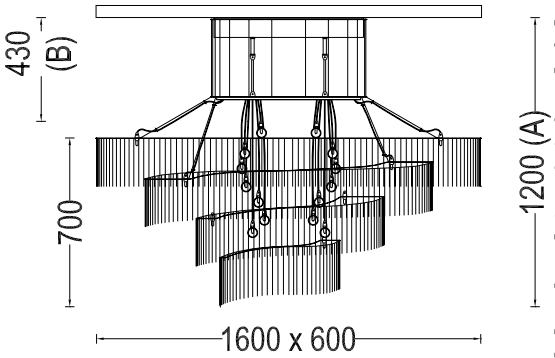

INTERACT

SELECT COLOUR

- SILVER *
- BRASS *
- COPPER *
- SMOKE *
- MIXED METALIC *
- RUST *
- WHITE
- RED
- BLACK

* METALLIC

CUSTOMISE DIMENSIONS

A
B
C

LAMP TYPE

QUANTITY

ADDITIONAL COMMENTS

WEB LINK **DOWNLOAD**

DROPLET

DROPLET

DESCRIPTION

THIS HIGHLY ECLECTIC DESIGN IS INSPIRED BY A DRIPPING STALACTITE THAT IS CONNECTED WITH A LATTICEWORK OF CHAIN. THE INVERTED CONICAL FORM GIVES THE ART PIECE A WEIGHTLESS, FLOATING QUALITY. ILLUMINATED BY A SPIRALLING ARRANGEMENT OF GLASS BALLS CONTAINING G9 HALOGEN LAMPS. AVAILABLE IN TWO SIZES.

MODEL	SHADE SIZE	TOTAL HEIGHT
DROPLET - 1000	1000W X 2430 MM	2700MM
DROPLET - 700	700W X 1900H MM	2150MM

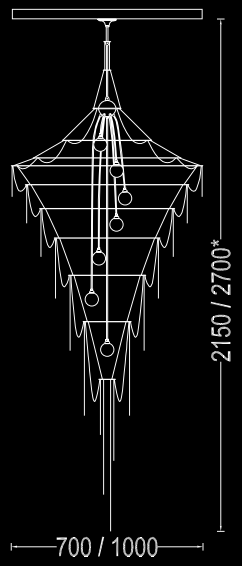

DROPLET | DROPLET - 1000 | DROPLET-1000-S

DESCRIPTION

Several cascading rings of stainless steel frames. Made from lasercut stainless steel frames, chrome plated or lacqured, solid brass components and ballchain in several optional finishes. Illuminated by 7 G9 Halogen lamps in 7 suspended pyrex glass balls in a spiraling formation. Suitable for a double volumed space only.

PRODUCT SIZE

SHADE SIZE:1000W X 2430 MM / TOTAL HEIGHT: 2700MM

PACKAGING DIMENSIONS

1140MM(W) X 1140MM(L) X 300MM(H)

LAMP TYPE & NO

7 X G9-HALOGEN 18-40 WATT LAMPS (126-280W) OR 7X G9-2.5W LEDS. OR 7X E12/14 OR E26/27 LEDS

CLASS II
IP RATING 54
QC RATING 21

VOLTAGE RANGE
110 - 240V

PRODUCT MARKS & RATINGS CE

WEIGHT 21KG
PACKED WEIGHT 35KG

TECHNICAL DRAWING

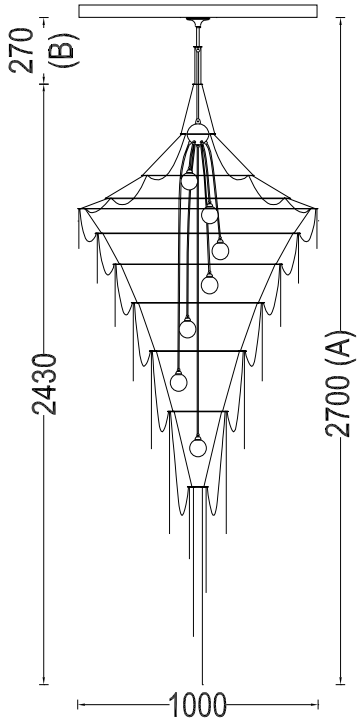

INTERACT

SELECT COLOUR

- SILVER *
- BRASS *
- COPPER *
- SMOKE *
- MIXED METALIC *
- RUST *
- WHITE
- RED
- BLACK

* METALLIC

CUSTOMISE DIMENSIONS

A
B

LAMP TYPE

QUANTITY

ADDITIONAL COMMENTS

WEB LINK DOWNLOAD

INDEX

DROPLET | DROPLET - 700 | DROPLET-700-S

DESCRIPTION

Several cascading rings of stainless steel frames. Made from lasercut stainless steel frames, chrome plated or lacqured, solid brass components and ballchain in several optional finishes. Illuminated by 5 G9 Halogen lamps in 5 suspended pyrex glass balls in a spiraling formation.

PRODUCT SIZE

SHADE SIZE: 700W X 1900H MM / TOTAL HEIGHT: 2150MM

PACKAGING DIMENSIONS

810MM(W) X 810MM(L) X 330MM(H)

LAMP TYPE & NO

5 X G9-HALOGEN 18-40 WATT LAMPS (90-200W) OR 5X G9-2.5W LEDS. OR 5X E12/14 OR E26/27 LEDS

CLASS II
IP RATING 54
QC RATING 21

VOLTAGE RANGE
110 - 240V

PRODUCT MARKS & RATINGS

WEIGHT 12KG
PACKED WEIGHT 20KG

TECHNICAL DRAWING

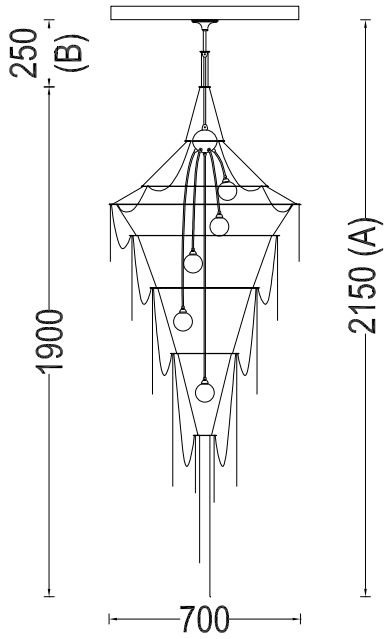

INTERACT

SELECT COLOUR

- SILVER *
- BRASS *
- COPPER *
- SMOKE *
- MIXED METALIC *
- RUST *
- WHITE
- RED
- BLACK

* METALLIC

CUSTOMISE DIMENSIONS

A
B

LAMP TYPE

QUANTITY

ADDITIONAL COMMENTS

WEB LINK DOWNLOAD

THE ENCHANTED FARAWAY TREE

THE ENCHANTED FARAWAY TREE

DESCRIPTION

AN EVOLUTION OF THE AWARD-WINNING FARAWAY TREE WHICH HAS BEEN TRANSFORMED INTO A SUSPENDED SCULPTURAL MOBILE. THIS DESIGN IS DERIVED FROM A SERIES OF COUNTERBALANCING, BOWING BRANCHES ALL SUSPENDED FROM ONE ANOTHER AND FLOWING DOWN A CENTRAL 'TRUNK'. IT CAN BE ORDERED IN CLUSTERS OF FOUR BRANCHES E.G., 4 TIER, 8 TIER, 12 TIER OR MORE. IT COULD BE A MAGNIFICENT ADDITION TO A 10-15 STOREY VOID INSIDE A SPIRAL STAIRWAY.

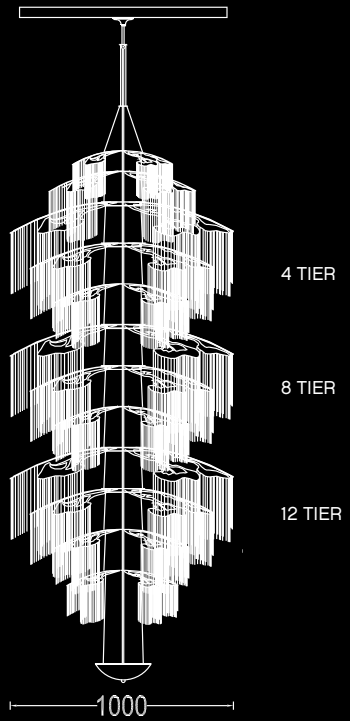

MODEL	SHADE SIZE	TOTAL HEIGHT	
ENCHANTED FARAWAY TREE - 12 TIER - 1000	1000W X 2800H MM	3250MM	
ENCHANTED FARAWAY TREE - 8 TIER - 1000	1000W X 2000H MM	2450MM	
ENCHANTED FARAWAY TREE - 4 TIER - 1000	1000W X 1300H MM	1600MM	

ENCHANTED FARAWAY TREE | ENCHANTED FARAWAY TREE - 12 TIER - 1000 | EFAT-12T-1000-S

DESCRIPTION

A scupltural tree art-chandelier constructed from a series of twelve (12) bowing, counterbalancing branches hanging from one another down a central `trunk`. Made from lasercut stainless steel frames, chrome plated or lacqured, solid brass components and ballchain in several optional finishes. Illuminated by 2 electrical systems one using 12 G9 Halogen lamps at nodes between branches and another using 3xGU.10 PAR-16 spotlights housed in a suspended uplighter dish.

PRODUCT SIZE

SHADE SIZE: 1000W X 2800H MM / TOTAL HEIGHT: 3250MM

PACKAGING DIMENSIONS

1140MM(W) X 1140MM(L) X 590MM(H)

LAMP TYPE & NO

ELECTRICAL 1: 8 X G9-HALOGEN 18-40 WATT (216-480W) OR 8X G9-2.5W LEDS. ELECTRICAL 2: 3 X GU.10-HALOGEN 50W (150W) OR 3X GU.10 5W LEDS

CLASS I
IP RATING 20
QC RATING 21

VOLTAGE RANGE
110 - 240V

PRODUCT MARKS & RATINGS CE

WEIGHT 42KG
PACKED WEIGHT 65KG

TECHNICAL DRAWING

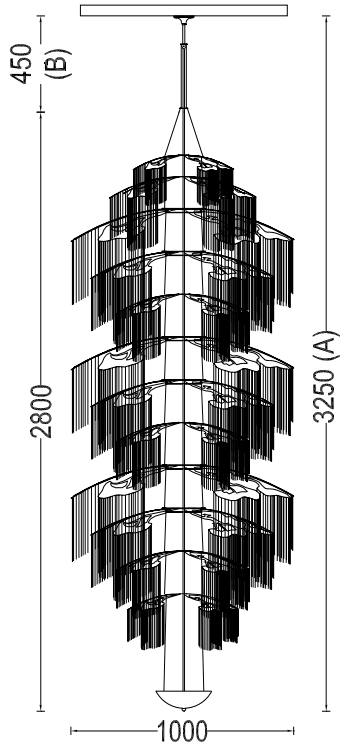

INTERACT

SELECT COLOUR

- SILVER *
- BRASS *
- COPPER *
- SMOKE *
- MIXED METALIC *
- RUST *
- WHITE
- RED
- BLACK

* METALLIC

CUSTOMISE DIMENSIONS

A
B

LAMP TYPE

QUANTITY

ADDITIONAL COMMENTS

WEB LINK DOWNLOAD

INDEX

ENCHANTED FARAWAY TREE | ENCHANTED FARAWAY TREE - 8 TIER - 1000 | EFAT-8T-1000-S

DESCRIPTION

A scupltural tree art-chandelier constructed from a series of eight (8) bowing, counterbalancing branches hanging from one another down a central `trunk`. Made from lasercut stainless steel frames, chrome plated or lacqured, solid brass components and ballchain in various finishes. Illuminated by 2 electrical systems one using 8 G9 Halogen lamps at nodes between branches and another using 3xGU.10 PAR-16 spotlights housed in a suspended uplighter dish.

PRODUCT SIZE

SHADE SIZE: 1000W X 2000H MM / TOTAL HEIGHT: 2450MM

PACKAGING DIMENSIONS

1140MM(W) X 1140MM(L) X 490MM(H)

LAMP TYPE & NO

ELECTRICAL 1: 8 X G9-HALOGEN 18-40 WATT (216-480W) OR 8X G9-2.5W LEDS. ELECTRICAL 2: 3 X GU.10-HALOGEN 50W (150W) OR 3X GU.10 5W LEDS

CLASS I
IP RATING 20
QC RATING 21

VOLTAGE RANGE
110 - 240V

PRODUCT MARKS & RATINGS CE

WEIGHT 27KG
PACKED WEIGHT 46KG

TECHNICAL DRAWING

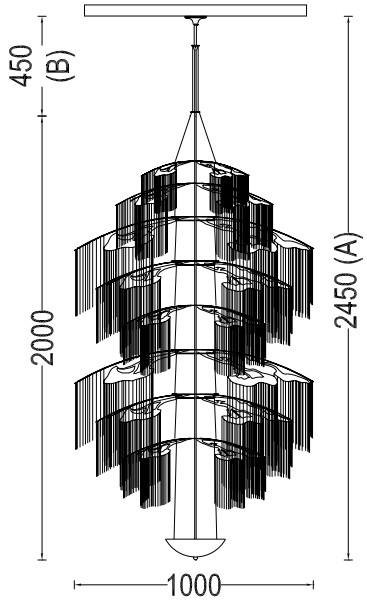

INTERACT

SELECT COLOUR

- SILVER *
- BRASS *
- COPPER *
- SMOKE *
- MIXED METALIC *
- RUST *
- WHITE
- RED
- BLACK

* METALLIC

CUSTOMISE DIMENSIONS

A
B

LAMP TYPE

QUANTITY

ADDITIONAL COMMENTS

WEB LINK DOWNLOAD

ENCHANTED FARAWAY TREE | ENCHANTED FARAWAY TREE - 4 TIER - 1000 | EFAT-4T-1000-S

DESCRIPTION

A scupltural tree art-chandelier constructed from a series of four (4) bowing, counterbalancing branches hanging from one another down a central `trunk`. Made from lasercut stainless steel frames, chrome plated or lacqured, solid brass components and ballchain in several optional finishes. Illuminated by 2 electrical systems one using 4 G9 Halogen lamps at nodes between branches and another using 3xGU.10 PAR-16 spotlights housed in a suspended uplighter dish.

PRODUCT SIZE

SHADE SIZE: 1000W X 1300H MM / TOTAL HEIGHT: 1600MM

PACKAGING DIMENSIONS

1140MM(W) X 1140MM(L) X 490MM(H)

LAMP TYPE & NO

ELECTRICAL 1: 4 X G9-HALOGEN 18-40 WATT (72-160W) OR 4X G9-2.5W LEDS. ELECTRICAL 2: 3 X GU.10-HALOGEN 50W (150W) OR 3X GU.10 5W LEDS

CLASS I
IP RATING 20
QC RATING 21

VOLTAGE RANGE
110 - 240V

PRODUCT MARKS & RATINGS CE

WEIGHT 14KG
PACKED WEIGHT 30KG

TECHNICAL DRAWING

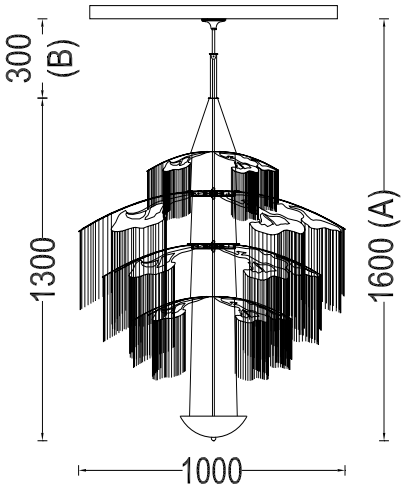

INTERACT

SELECT COLOUR

- SILVER *
- BRASS *
- COPPER *
- SMOKE *
- MIXED METALIC *
- RUST *
- WHITE
- RED
- BLACK

* METALLIC

CUSTOMISE DIMENSIONS

A
B

LAMP TYPE

QUANTITY

ADDITIONAL COMMENTS

WEB LINK DOWNLOAD

INDEX

ELONGATED FARAWAY TREE CHANDELIER

ELONGATED FARAWAY TREE CHANDELIER

DESCRIPTION

AN EVOLUTION OF OUR ORIGINAL 'ROUND SHAPED' FARAWAY TREE, AN ORGANIC `TREE-SHAPED` CHANDELIER INSPIRED BY GRAPHIC REPRESENTATIONS OF TREES ON ARCHITECTURAL DRAWINGS. ILLUMINATED BY 3 CLUSTERS OF G4 HALOGEN/LED'S IN SUSPENDED GLASS BALLS.

MODEL	SHADE SIZE	TOTAL HEIGHT
FARAWAY TREE - ELONGATED - 1600X700	1600X700W X 530H MM	1000MM

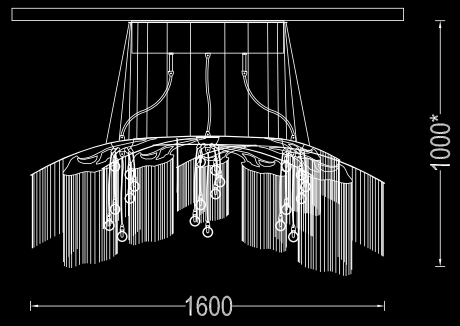

ELONGATED FARAWAY TREE | FARAWAY TREE - ELONGATED - 1600X700 | FAT-ELONG-1600-S

DESCRIPTION

An elongated chandelier inspired by trees constructed from a bowing 2D graphic metal frame. Made from lasercut stainless steel frames, chrome plated or lacquered, solid brass components and ballchain in several optional finishes. Illuminated by G4 Halogen lamps within 18 suspended glass balls. Suitable for a linear space or over a long table.

PRODUCT SIZE

SHADE SIZE: 1600X700W X 530H MM / TOTAL HEIGHT: 1000MM

PACKAGING DIMENSIONS

1760MM(W) X 800MM(L) X 390MM(H)

LAMP TYPE & NO

18 X G4-HALOGEN 12V 10 WATT LAMPS (180W) OR 18X G4-2W LEDS

CLASS III
IP RATING 52
QC RATING 21

VOLTAGE RANGE
12V

PRODUCT MARKS & RATINGS

WEIGHT 18KG
PACKED WEIGHT 35KG

TECHNICAL DRAWING

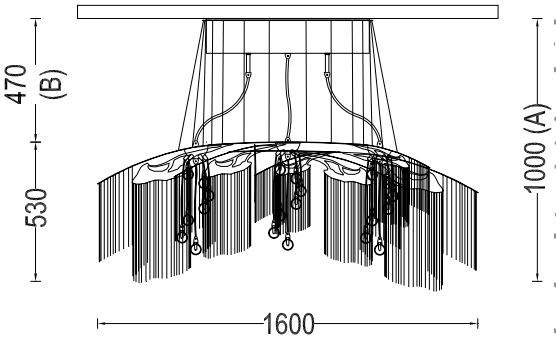

INTERACT

SELECT COLOUR

- SILVER *
- BRASS *
- COPPER *
- SMOKE *
- MIXED METALIC *
- RUST *
- WHITE
- RED
- BLACK

* METALLIC

CUSTOMISE DIMENSIONS

A
B

LAMP TYPE

QUANTITY

ADDITIONAL COMMENTS

WEB LINK DOWNLOAD

SPIRAL TREES

SPIRAL TREES

DESCRIPTION

A DESIGN WHICH IS BASED ON PART OF A MASSIVE TREE FOREST INSTALLATION IN A PRIVATE HOME IN LONDON. THIS IS AN EVOLUTION OF OUR ENCHANTED FARAWAY TREE WHICH FUSES ALL THE BRANCHES INTO A SINGLE ELEGANT SPIRALLING FRAME.

MODEL	SHADE SIZE	TOTAL HEIGHT
SINGLE SPIRAL TREE - SUSPENDED	1500W X 2200H MM	3200MM
DOUBLE SPIRAL TREE - SUSPENDED	1200X2000 X 1500H MM	2200MM

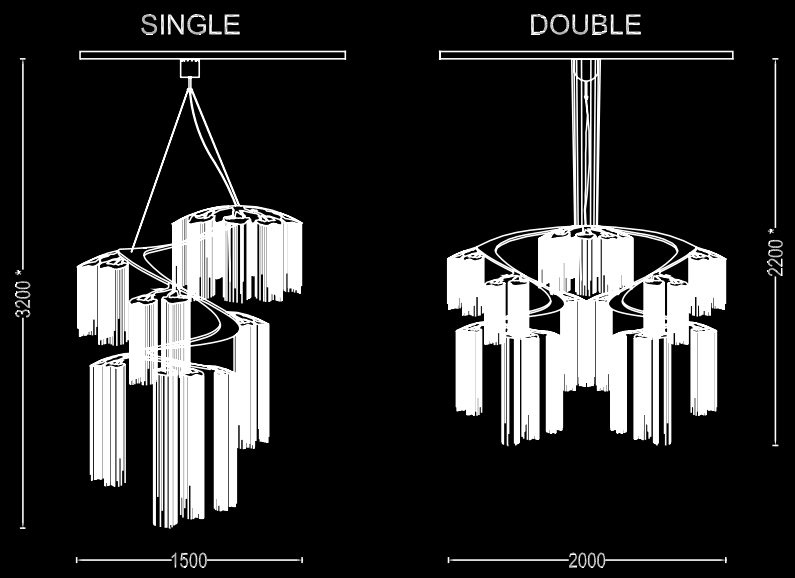

SPIRAL TREES | SINGLE SPIRAL TREE - SUSPENDED - 1500 | SFAT-SINGLE-1500-S

DESCRIPTION

A design which is based on part of a massive tree forest installation. This is an evolution of our enchanted faraway tree which fuses all the branches into a single elegant spiraling frame. Illuminated by 18 surface mounted G4 Halogen or LED lamps as well as a 10m long LED strip.

PRODUCT SIZE

SHADE SIZE: 1500W X 2200H MM / TOTAL HEIGHT: 3200MM

PACKAGING DIMENSIONS

1600MM(W) X 1600MM(L) X 430MM(H)

LAMP TYPE & NO

ELECTRICAL 1: 18 X G4-HALOGEN 12V 10 WATT (180W) OR 18X G4-2W LEDS. ELECTRICAL 2: 10M LED STRIPLIGHT WARM WHITE (50W)

CLASS II
IP RATING 52
QC RATING 21

VOLTAGE RANGE
12V

PRODUCT MARKS & RATINGS

WEIGHT 61KG
PACKED WEIGHT 84KG

TECHNICAL DRAWING

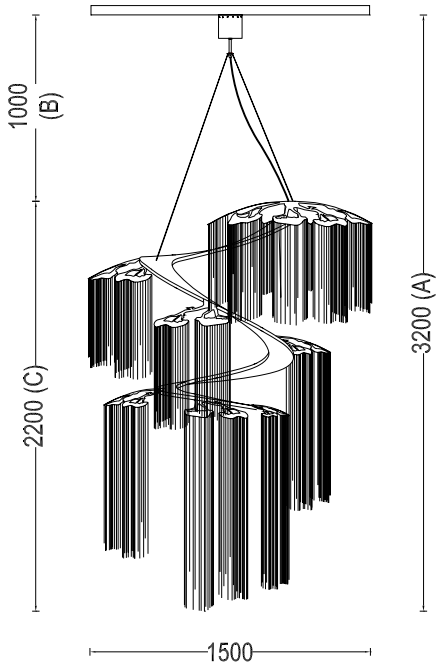

INTERACT

SELECT COLOUR

- SILVER *
- BRASS *
- COPPER *
- SMOKE *
- MIXED METALIC *
- RUST *
- WHITE
- RED
- BLACK

* METALLIC

CUSTOMISE DIMENSIONS

A
B

LAMP TYPE

QUANTITY

ADDITIONAL COMMENTS

WEB LINK DOWNLOAD

INDEX
52

SPIRAL TREES | DOUBLE SPIRAL TREE - SUSPENDED | SFAT-DOUBLE-S

DESCRIPTION

A design which is based on part of a massive tree forest installation. This is an evolution of our enchanted faraway tree which fuses all the branches into a single elegant double spiraling frame. Illuminated by 18 surface mounted G4 Halogen or LED lamps as well as a 15m long LED strip.

PRODUCT SIZE

SHADE SIZE: 1200X2000 X 1500H MM / TOTAL HEIGHT: 2200MM

PACKAGING DIMENSIONS

1300MM(W) X 2220MM(L) X 430MM(H)

LAMP TYPE & NO

ELECTRICAL 1: 18 X G4-HALOGEN 12V 10 WATT (180W) OR 18X G4-2W LEDS. ELECTRICAL 2: 15M LED STRIPLIGHT WARM WHITE (75W)

CLASS III
IP RATING 52
QC RATING 21

VOLTAGE RANGE
12V

PRODUCT MARKS & RATINGS CE

WEIGHT 70KG
PACKED WEIGHT 95KG

TECHNICAL DRAWING

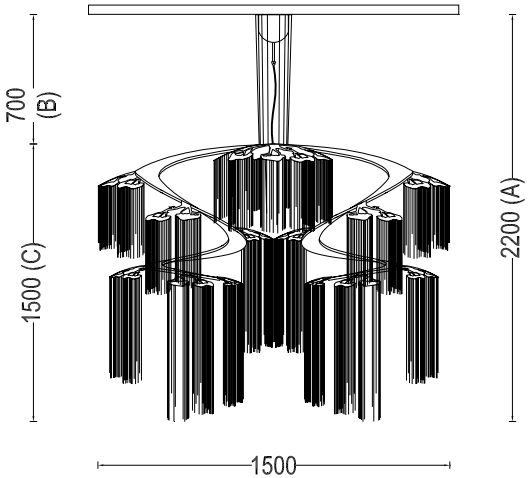

INTERACT

SELECT COLOUR

- SILVER *
- BRASS *
- COPPER *
- SMOKE *
- MIXED METALIC *
- RUST *
- WHITE
- RED
- BLACK

* METALLIC

CUSTOMISE DIMENSIONS

A
B

LAMP TYPE

QUANTITY

ADDITIONAL COMMENTS

WEB LINK DOWNLOAD

INDEX

COMPLEX CLASSICS

CHANDELIERS AND WALL SCONCES

INDEX
34

COMPLEX CLASSICS

CHANDELIERS AND WALL SCONCES

For the 99 percent of the time we've been on Earth, we were hunters and gatherers, our lives dependent on knowing the fine, small details of our world. Deep inside, we still have a longing to be reconnected with the nature that shaped our imagination, our language, our song and dance, our sense of the divine. Janine M. Benyus

COCOON

STREAMWAVE

RADIAL

LINEAL

WINDCHIME

BIGLOVE CLOVER

FARAWAY TREE

FLOWER OF LIFE

PROTEA

FUSCHIA

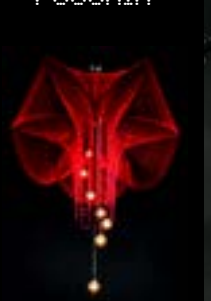

MOONFLOWER

ROSE

NGOMA DRUM

THREE-TIERED

ELLIPTICAL THREE-TIERED

COCOON

COCOON

DESCRIPTION

COCOON IS AN ELONGATED, SLEEK AND MINIMALLY STYLED `POD SHAPED` CHANDELIER SUITABLE FOR A LINEAR SPACE OR OVER A TABLE / COUNTERTOP. ILLUMINATED BY 9X G9 HALOGEN OR LED LAMPS WITHIN HANDMADE CLEAR PYREX GLASS BALLS WITH OR BY 9X E27 VINTAGE STYLE LED BULBS.

MODEL	SHADE SIZE	TOTAL HEIGHT
COCOON - SUSPENDED - 1750X400	1750X400W X 400H MM	1000MM

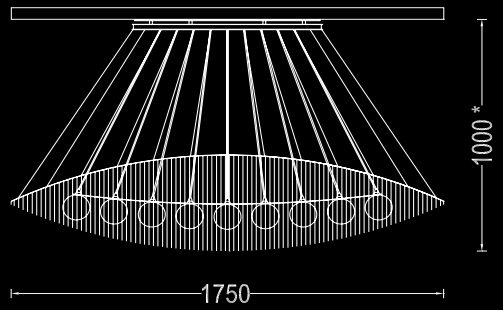

COCOON | COCOON - SUSPENDED - 1750 | COCOON-1750-S

DESCRIPTION

Cocoon is an elongated, sleek and minimally styled 'pod shaped' chandelier suitable for a linear space or over a table / countertop. Illuminated by 9x G9 Halogen/LED bulbs within handmade clear pyrex glass balls with OR by 9x E27 vintage style LED bulbs.

PRODUCT SIZE

SHADE SIZE: 1750X400W X 400H MM / TOTAL HEIGHT: 1000MM

PACKAGING DIMENSIONS

1920MM(W) X 530MM(L) X 390MM(H)

LAMP TYPE & NO

9 X G9-HALOGEN 18-40 WATT LAMP (162-360) OR 9X G9-2.5W LEDS OR 9 X E26/27 LEDS

CLASS II
IP RATING 52
QC RATING 21

VOLTAGE RANGE
110 - 240V

PRODUCT MARKS & RATINGS CE

WEIGHT 13KG
PACKED WEIGHT 30KG

TECHNICAL DRAWING

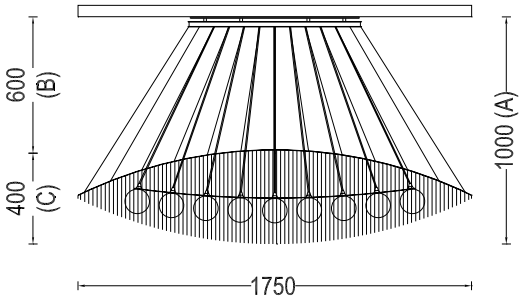

INTERACT

SELECT COLOUR

- SILVER *
- BRASS *
- COPPER *
- SMOKE *
- MIXED METALIC *
- RUST *
- WHITE
- RED
- BLACK

* METALLIC

CUSTOMISE DIMENSIONS

A
B
C

LAMP TYPE

QUANTITY

ADDITIONAL COMMENTS

WEB LINK DOWNLOAD

INDEX

streamwave

STREAMWAVE

DESCRIPTION

STREAMWAVE IS A VERY UNUSUAL DYNAMIC PIECE THAT PLAYS WITH ONE`S PERCEPTION AS IT APPEARS TO TRANSFORM FROM DIFFERENT VIEWPOINTS IN SUBTLE WAYS. THE DESIGN IS COMPOSED OF STAGGERED WAVES WHICH EVOKE A SUBTLE FEELING OF RHYTHMIC MOVEMENT. ILLUMINATED BY 20X G4 LEDS.

MODEL	SHADE SIZE	TOTAL HEIGHT
STREAMWAVE - 1200MM - SUSPENDED	1200X400W X 220H MM	700MM

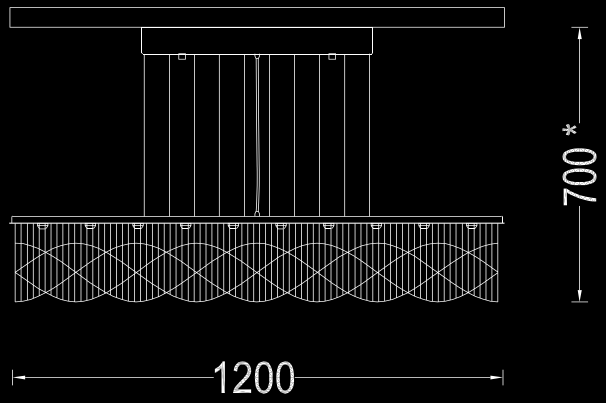

STREAMWAVE | STREAMWAVE - SUSPENDED - 1200 | STREAM-1200-S

DESCRIPTION

StreamWave is a very unusual dynamic piece that plays with one's perception as it appears to transform from different viewpoints in subtle ways. The design is composed of staggered waves which evoke a subtle feeling of rhythmic movement. Illuminated by 20x 2W G4 LED's.

PRODUCT SIZE

SHADE SIZE: 1200X400W X 220H MM / TOTAL HEIGHT: 700MM

PACKAGING DIMENSIONS

1300MM(W) X 520MM(L) X 390MM(H)

LAMP TYPE & NO

20 X G4-LED 12V 2 WATT LAMPS (40W) LED ONLY

CLASS III
IP RATING 52
QC RATING 31

VOLTAGE RANGE
12 V (110-240V IN)

PRODUCT MARKS & RATINGS CE

WEIGHT 18KG

PACKED WEIGHT 26KG

TECHNICAL DRAWING

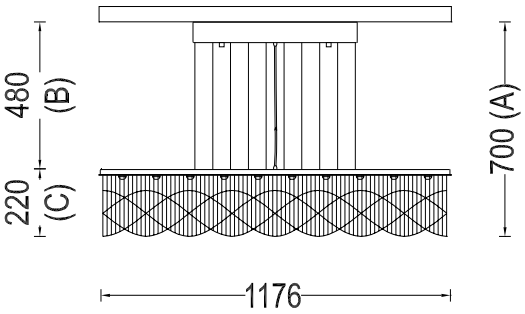

INTERACT

SELECT COLOUR

- SILVER *
- BRASS *
- COPPER *
- SMOKE *
- MIXED METALIC *
- RUST *
- WHITE
- RED
- BLACK

* METALLIC

CUSTOMISE DIMENSIONS

A
B
C

LAMP TYPE

QUANTITY

ADDITIONAL COMMENTS

WEB LINK **DOWNLOAD**

RADIAL

RADIAL

DESCRIPTION

RADIAL IS THE ULTIMATE RING SHAPED CHANDELIER AND IS ESSENTIALLY AN EXTENSION OF THE 'LINEAL RANGE' AS THE 'ROUND' VERSION. AS WITH THE LINEAL, THE CONCEPT IS A TEXTURED GRID WITH LAYERS OF DIFFERENT COLOURED METALLIC CHAINS FORMING A MODULAR MATRIX. THIS PIECE IS 1.2M DIAMETER AND IS ILLUMINATED BY 56X 1 OR 2W G4 LED'S. IT WILL SOON BE AVAILABLE AVAILABLE IN 2 SMALLER STANDARD SIZES.

MODEL	SHADE SIZE	TOTAL HEIGHT
RADIAL - 1200MMD - SUSPENDED	1200DIA X 90H MM	550MM

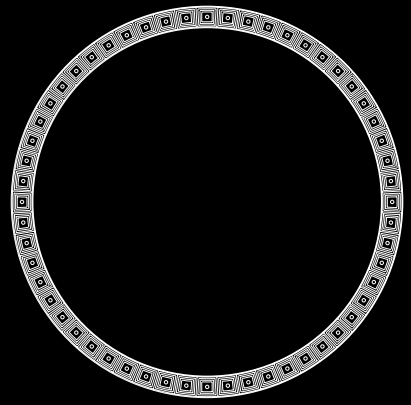

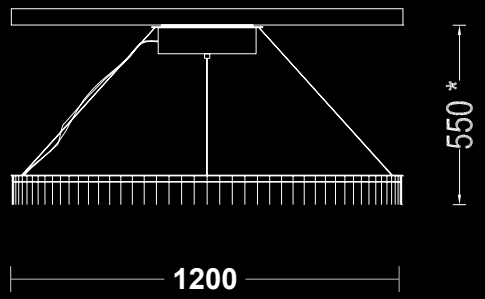

RADIAL | RADIAL - SUSPENDED - 1200 | RADIAL-1200-S

DESCRIPTION

Radial is the ultimate ring shaped chandelier and is essentially an extension of the 'Lineal range' as the 'round' version. As with the Lineal, the concept is a textured grid with layers of different coloured metallic chains forming a modular matrix. This is the largest piece in the range at 1.2m diameter and is Illuminated by 56x 1 or 2W G4 LED's.

PRODUCT SIZE

SHADE SIZE: 1200DIA X 90H MM / TOTAL HEIGHT: 550MM

PACKAGING DIMENSIONS

1330MM(W) X 1330MM(L) X 390MM(H)

LAMP TYPE & NO

56 X G4-LED 12V 1-2 WATT LAMPS (56-112W) LED ONLY

CLASS III
IP RATING 52
QC RATING 31

VOLTAGE RANGE
12 V (110-240V IN)

PRODUCT MARKS & RATINGS CE

WEIGHT 20KG

PACKED WEIGHT 40KG

TECHNICAL DRAWING

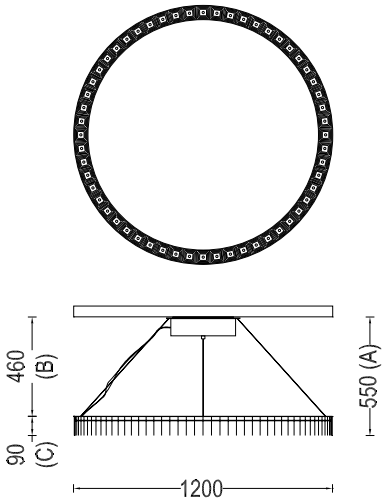

INTERACT

SELECT COLOUR

- SILVER *
- BRASS *
- COPPER *
- SMOKE *
- MIXED METALIC *
- RUST *
- WHITE
- RED
- BLACK

* METALLIC

CUSTOMISE DIMENSIONS

A
B
C

LAMP TYPE

QUANTITY

ADDITIONAL COMMENTS

WEB LINK DOWNLOAD

LINEAL

LINEAL

DESCRIPTION

A VERY SLEEK AND MINIMAL LAMP INTENDED FOR A FUNCTIONAL WORKING SPACE SUCH AS AN OFFICE OR ABOVE A POOL TABLE WHERE A LARGE POOL OF LIGHT IS REQUIRED TO PERFORM TASKS. FEATURES A DECORATIVE 'TEXTURE PLANE' THAT HAS A 'TEXTILE' QUALITY WITH A COMPACT MATRIX OF LED LAMPS. DESIGNED BY ADAM HOETS IN 2019.

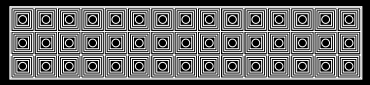

No.1

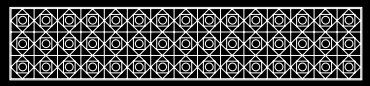

No.2

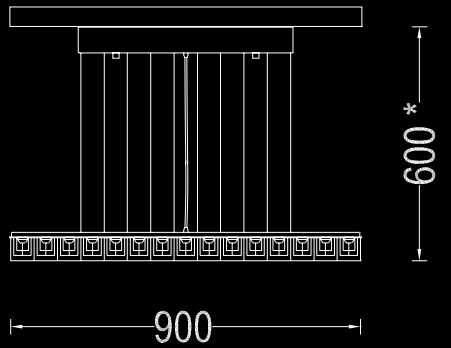

MODEL	SHADE SIZE	TOTAL HEIGHT	
LINEAL NO.1 - SUSPENDED - 900X180	900X200W X 180H MM	600MM	
LINEAL NO.2 - SUSPENDED - 900X180	900X200W X 180H MM	600MM	

LINEAL | LINEAL NO.1 - SUSPENDED | LINEAL-NO.1-S

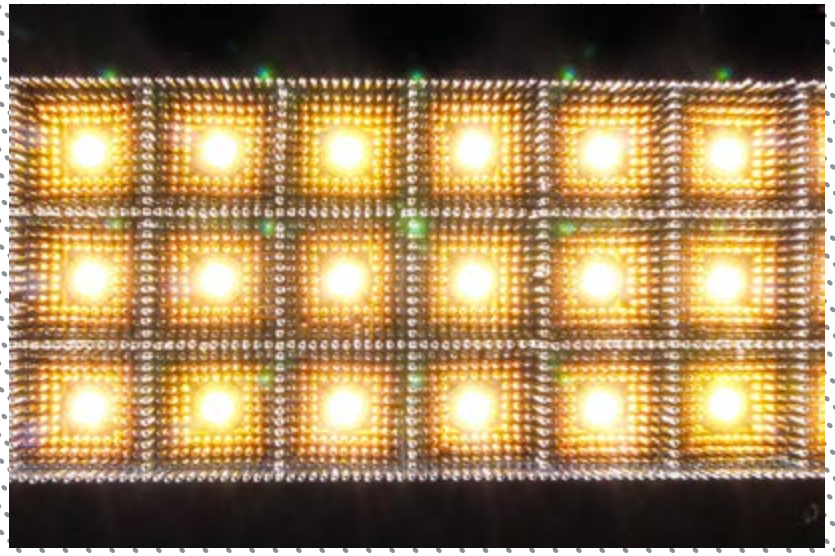

DESCRIPTION

A modern elongated minimal chandelier with layered geometric square chain pattern. The concept is a textured grid with layers of different coloured metallic chains forming a modular matrix. Illuminated by 45 3W G4 LED's. Perfect for a workspace or office type environment.

PRODUCT SIZE

SHADE SIZE: 900X180W X 72H MM / TOTAL HEIGHT: 600MM

PACKAGING DIMENSIONS

1000MM(W) X 300MM(L) X 390MM(H)

LAMP TYPE & NO

45 X G4-LED 12V 2 WATT LAMPS (90W) LED ONLY

CLASS II
IP RATING 52
QC RATING 31

VOLTAGE RANGE
12 V (110-240V IN)

PRODUCT MARKS & RATINGS CE

WEIGHT 12KG
PACKED WEIGHT 20KG

TECHNICAL DRAWING

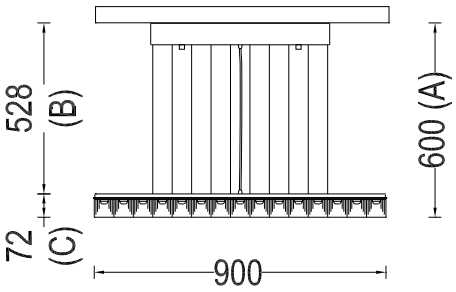

INTERACT

SELECT COLOUR

- SILVER *
- BRASS *
- COPPER *
- SMOKE *
- MIXED METALIC *
- RUST *
- WHITE
- RED
- BLACK

* METALLIC

CUSTOMISE DIMENSIONS

A
B

LAMP TYPE

QUANTITY

ADDITIONAL COMMENTS

WEB LINK DOWNLOAD

LINEAL | LINEAL NO.2 - SUSPENDED | LINEAL-NO.2-S

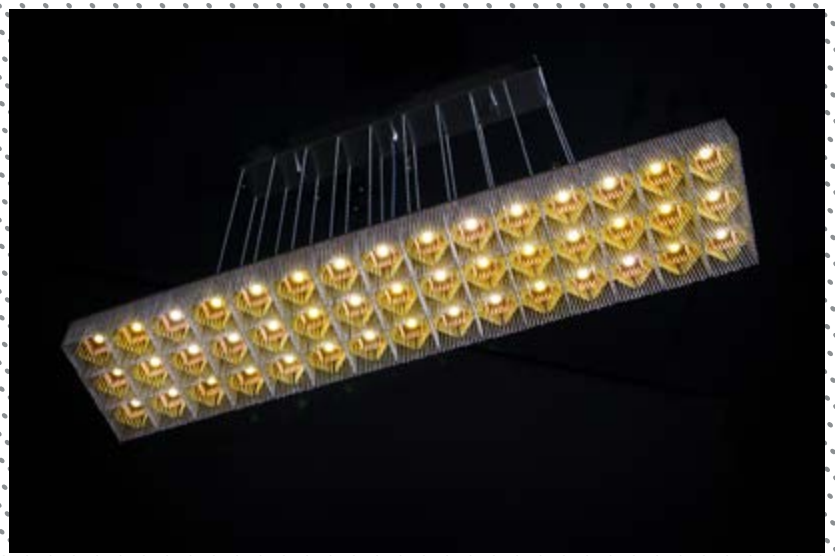

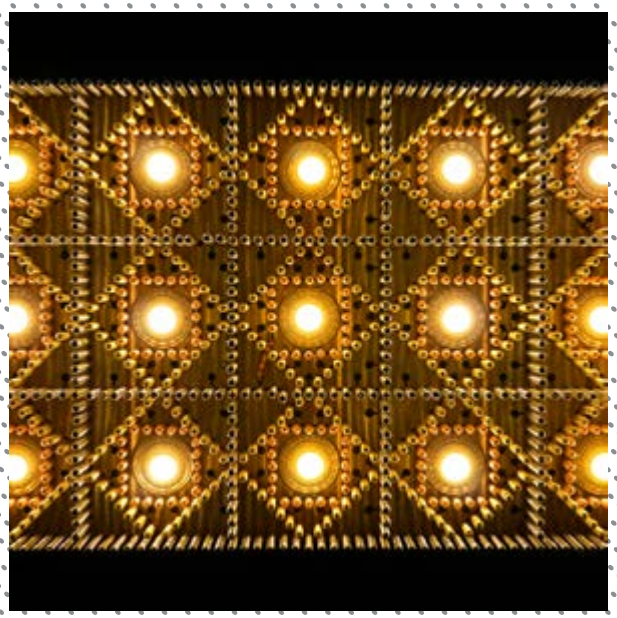

DESCRIPTION

A modern minimal pendant lamp with layered geometric square chain pattern. Illuminated by 45 3W G4 LED's. Perfect for a workspace or office type environment.

PRODUCT SIZE

SHADE SIZE: 900X180W X 72H MM / TOTAL HEIGHT: 600MM

PACKAGING DIMENSIONS

460MM(W) X 460MM(L) X 330MM(H)

LAMP TYPE & NO

45 X G4-LED 12V 2 WATT LAMPS (90W) LED ONLY

CLASS II
IP RATING 52
QC RATING 31

VOLTAGE RANGE
12 V (220V INPUT)

PRODUCT MARKS & RATINGS CE

WEIGHT 10KG

PACKED WEIGHT 18KG

TECHNICAL DRAWING

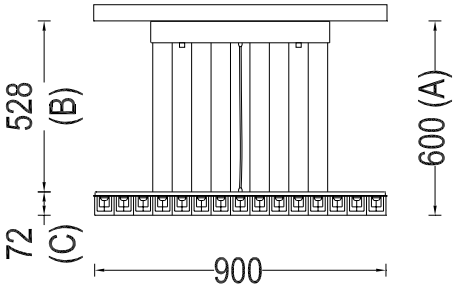

INTERACT

SELECT COLOUR

- SILVER *
- BRASS *
- COPPER *
- SMOKE *
- MIXED METALIC *
- RUST *
- WHITE
- RED
- BLACK

* METALLIC

CUSTOMISE DIMENSIONS

A
B

LAMP TYPE

QUANTITY

ADDITIONAL COMMENTS

WEB LINK DOWNLOAD

WINDCHIME

WINDCHIME

DESCRIPTION

A POETIC INTERPRETATION OF TRADITIONAL BAMBOO WINDCHIME FORMS. THE DESIGN IS A CIRCULAR TIERED ARRANGEMENT OF REPEATED 'WINDCHIMES'. IT IS ILLUMINATED BY G4 LED'S IN EACH WINDCHIME AS WELL AS 6 LEDS ON TOP OF THE MAIN FRAME WHICH ILLUMINATE AND CAST DRAMATIC SHADOWS ONTO THE CEILING.

MODEL	SHADE SIZE	TOTAL HEIGHT
WINDCHIME - SUSPENDED - 700	700W X 1820 MM	2320MM

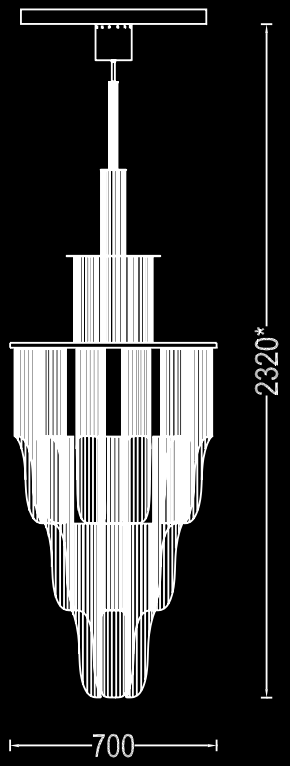

WINDCHIME | WINDCHIME - SUSPENDED - 700 | CHIME-700-S

DESCRIPTION

A poetic interpretation of traditional bamboo windchime forms. The design is a circular tiered arrangement of repeated 'windchimes'. The chandelier is illuminated by 24 G4 LED's in each windchime as well as 6 LEDs on top of the main frame which illuminate and cast dramatic shadows onto the ceiling.

PRODUCT SIZE

SHADE SIZE: 700W X 1820H MM / TOTAL HEIGHT: 2320MM

PACKAGING DIMENSIONS

810MM(W) X 810MM(L) X 330MM(H)

LAMP TYPE & NO

30 X G4-LED 12V 2 WATT LAMPS (60W) LED ONLY

CLASS III
IP RATING 52
QC RATING 31

VOLTAGE RANGE
12V

PRODUCT MARKS & RATINGS CE

WEIGHT 25KG
PACKED WEIGHT 33KG

TECHNICAL DRAWING

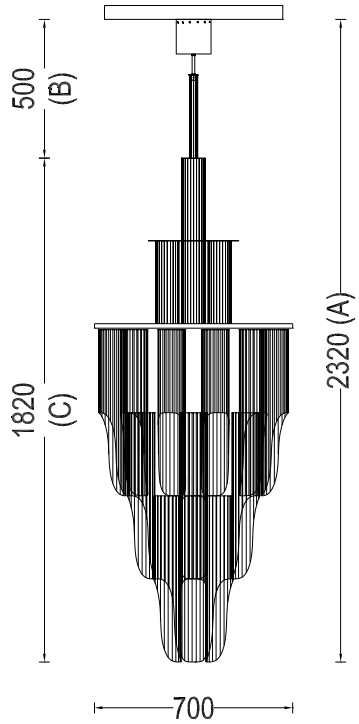

INTERACT

SELECT COLOUR

- SILVER *
- BRASS *
- COPPER *
- SMOKE *
- **MIXED METALIC ***
- RUST *
- WHITE
- RED
- BLACK

* METALLIC

CUSTOMISE DIMENSIONS

A
B

LAMP TYPE

QUANTITY

ADDITIONAL COMMENTS

WEB LINK **DOWNLOAD**

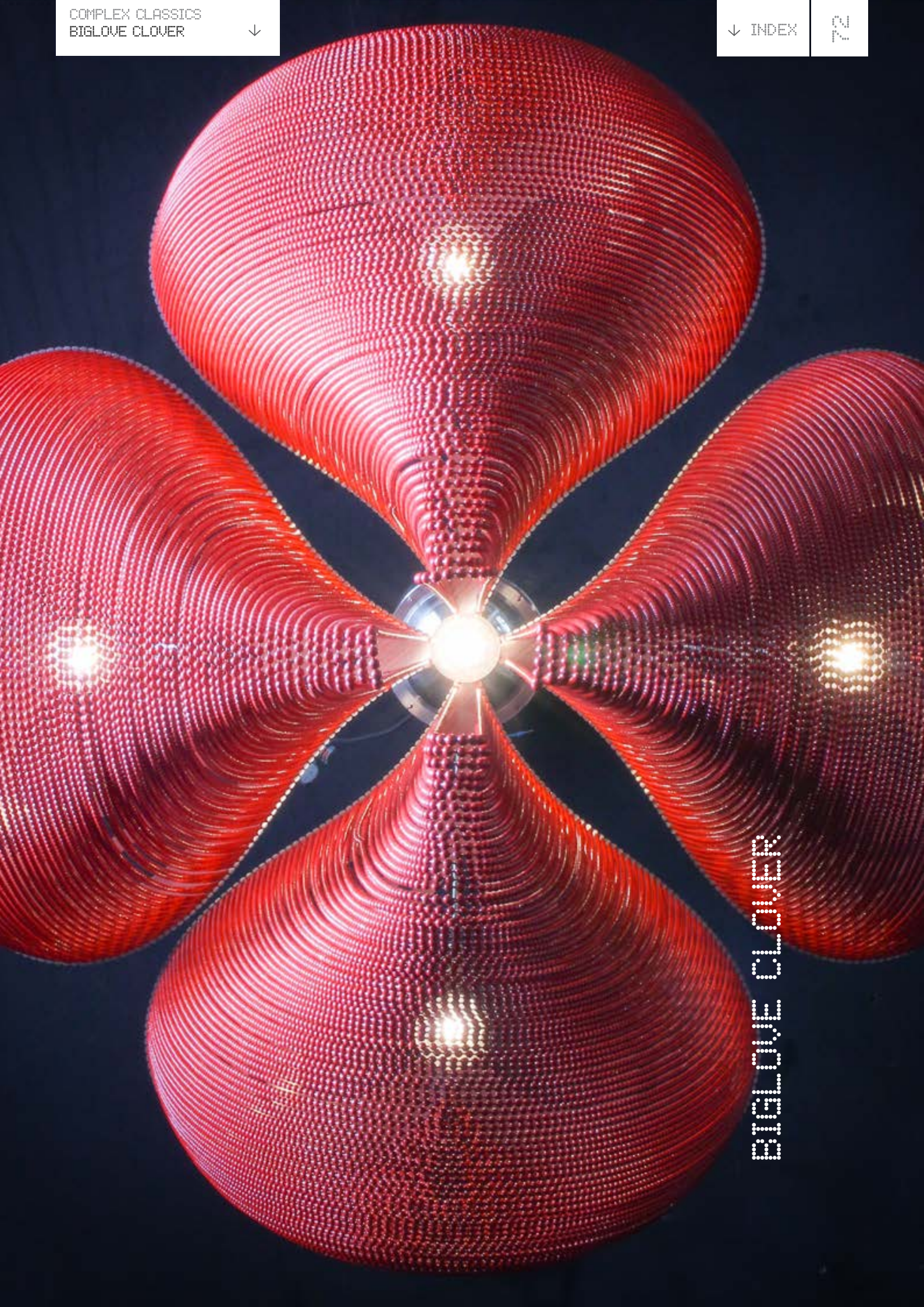
BIGLOVE CLOVER

BIGLOVE CLOVER

DESCRIPTION

A FOUR LEAF CLOVER DESIGN TRANSLATED INTO A VOLUPTUOUS AND SENSUAL HEART SHAPED CHANDELIER FORM. ILLUMINATED BY 5 G4 HALOGEN OR LED LAMPS IN SUSPENDED PYREX GLASS BALLS. ALSO AVAILABLE AS A WALL SCONCE.

MODEL	SHADE SIZE	TOTAL HEIGHT
BIGLOVE CLOVER - SUSPENDED - 700	700W x 900H MM	1700MM
BIGLOVE CLOVER - WALL SCONCE - 300	300 X 275W MM	650MM

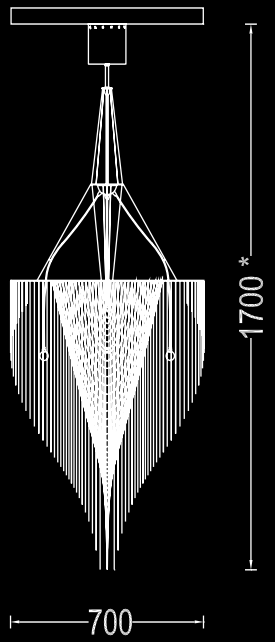

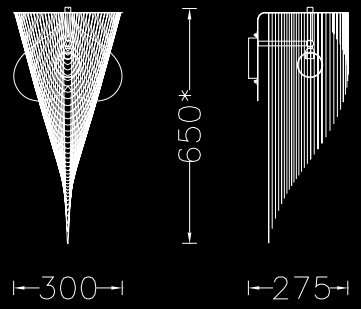

BIGLOVE CLOVER | BIGLOVE CLOVER - SUSPENDED - 700 | BIGLOVE-700-S

DESCRIPTION

A four leaf clover design translated into a voluptuous and sensual heart shaped chandelier form. Illuminated by 5 G4 halogen or LED lamps in suspended Pyrex glass balls.

PRODUCT SIZE

SHADE SIZE: 700W X 900H MM / TOTAL HEIGHT: 1700MM

PACKAGING DIMENSIONS

810MM(W) X 810MM(L) X 330MM(H)

LAMP TYPE & NO

5 X G4-HALOGEN 12V 20 WATT LAMPS (100W) OR 5X G4-2W LEDS. OR 5X E12/14 // E26/27 LEDS

CLASS III
IP RATING 52
QC RATING 31

VOLTAGE RANGE
12V

PRODUCT MARKS & RATINGS

WEIGHT 8KG

PACKED WEIGHT 19KG

TECHNICAL DRAWING

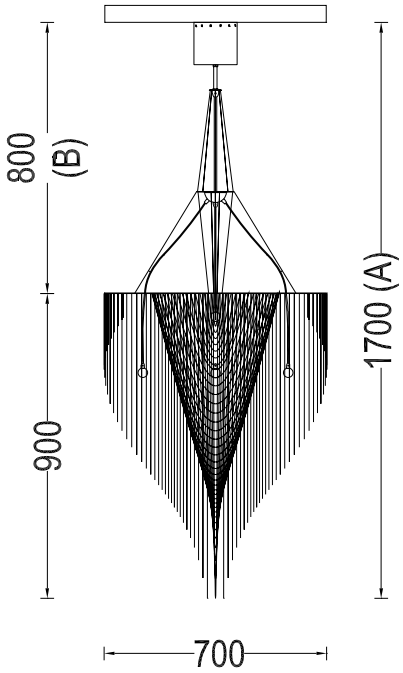

INTERACT

SELECT COLOUR

- SILVER *
- BRASS *
- COPPER *
- SMOKE *
- MIXED METALIC *
- RUST *
- WHITE
- RED
- BLACK

* METALLIC

CUSTOMISE DIMENSIONS

A
B

LAMP TYPE

QUANTITY

ADDITIONAL COMMENTS

WEB LINK DOWNLOAD

INDEX

BIGLOVE CLOVER | BIGLOVE CLOVER - WALL SCONCE - 300 | BIGLOVE-300-WS

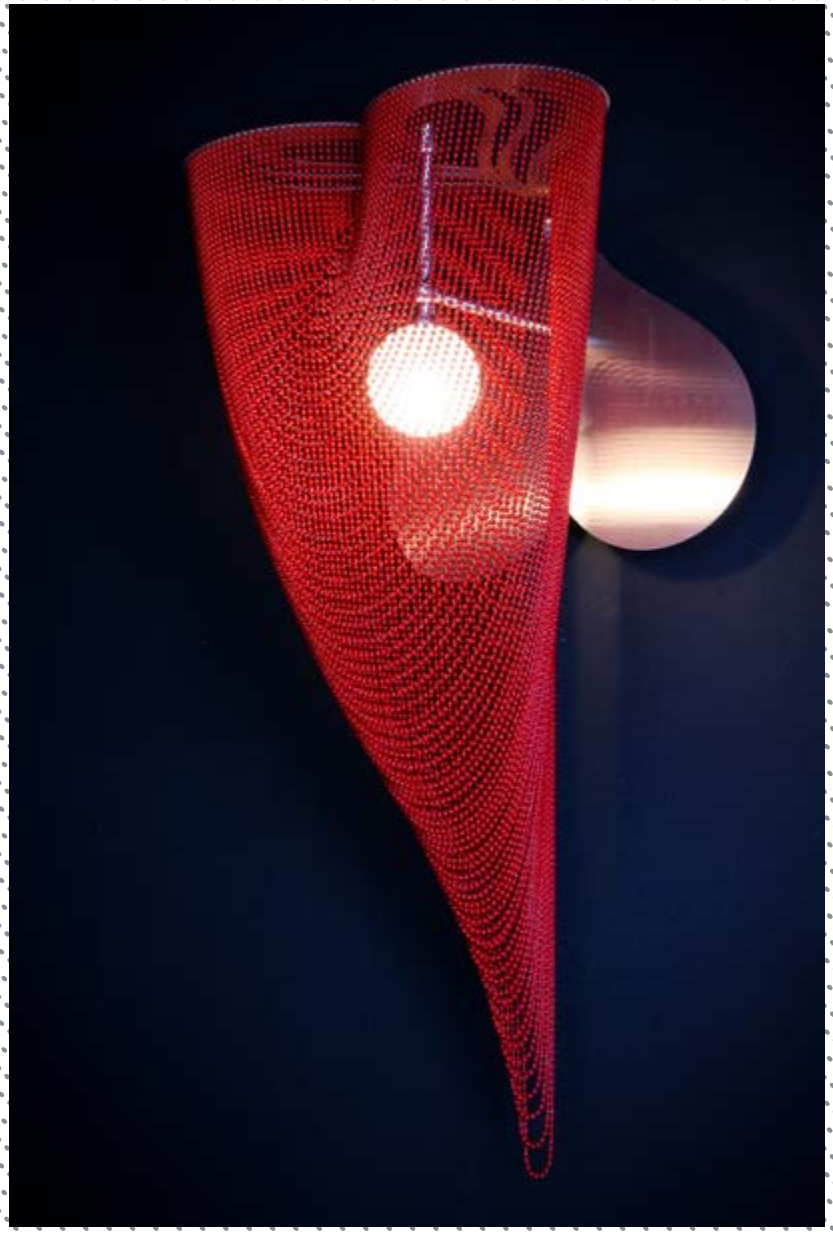

DESCRIPTION

An extension of the existing BigLove clover collection now also available as a matching wall sconce. Illuminated by 1x G9 Halogen/LED bulb within handmade clear or sandblasted pyrex glass ball with OR by 1x E27 vintage style LED bulb.

PRODUCT SIZE

SHADE SIZE: 300X275W MM / TOTAL HEIGHT: 650MM

PACKAGING DIMENSIONS

330MM(W) X 400MM(L) X 320MM(H)

LAMP TYPE & NO

1 X G9-HALOGEN 18-40 WATT LAMP OR 1X G9-2.5W LED. OR E12/14 // E26/27 LED

CLASS I
IP RATING 54
QC RATING 21

VOLTAGE RANGE
110-240V

PRODUCT MARKS & RATINGS CE

WEIGHT 5KG
PACKED WEIGHT 7KG

TECHNICAL DRAWING

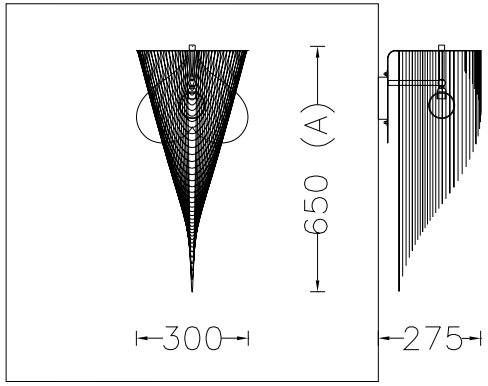

INTERACT

SELECT COLOUR

- SILVER *
- BRASS *
- COPPER *
- SMOKE *
- MIXED METALIC *
- RUST *
- WHITE
- RED
- BLACK

* METALLIC

CUSTOMISE DIMENSIONS

A
B

LAMP TYPE

QUANTITY

ADDITIONAL COMMENTS

WEB LINK DOWNLOAD

INDEX

FARAWAY TREE

FARAWAY TREE

DESCRIPTION

AN ORGANIC 'TREE-SHAPED' CHANDELIER INSPIRED BY GRAPHIC REPRESENTATIONS OF TREES ON ARCHITECTURAL DRAWINGS. ILLUMINATED BY A CONCEALED LIGHT SOURCE WITHIN A SUSPENDED UP-LIGHTER DISH. AVAILABLE IN THREE SIZES AND AS A WALL SCONCE.

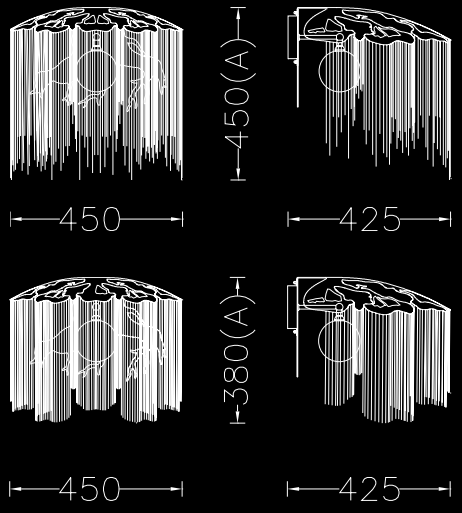

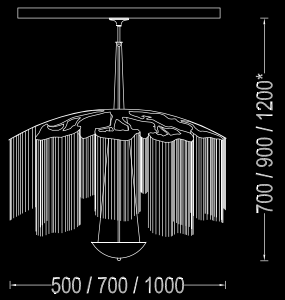

MODEL	SHADE SIZE	TOTAL HEIGHT
FARAWAY TREE - 1000	1000W X 750H MM	1200MM
FARAWAY TREE - 700	700W X 550H MM	900MM
FARAWAY TREE - 500	500W X 400H MM	700MM
FARAWAY TREE - 450 - WALL SCONCE	450 X 425W MM	380-450MM

FARAWAY TREE CHANDELIERS | FARAWAY TREE - 1000 | FAT-1000-S

DESCRIPTION

A chandelier inspired by trees constructed from a bowing 2D graphic metal frame. Made from lasercut stainless steel frames, chrome plated or lacqured, solid brass components and ballchain in several optional finishes. Illuminated by 3xGU.10 PAR-16 spotlights housed in a suspended uplighter dish.

PRODUCT SIZE

SHADE SIZE: 1000W X 750H MM / TOTAL HEIGHT: 1200MM

PACKAGING DIMENSIONS

1140MM(W) X 1140MM(L) X 300MM(H)

LAMP TYPE & NO

3 X GU.10-HALOGEN 50W (150W) OR 3X GU.10-5W LEDS

CLASS I
IP RATING 20
QC RATING 21

VOLTAGE RANGE
110 - 240V

PRODUCT MARKS & RATINGS CE

WEIGHT 14KG
PACKED WEIGHT 27KG

TECHNICAL DRAWING

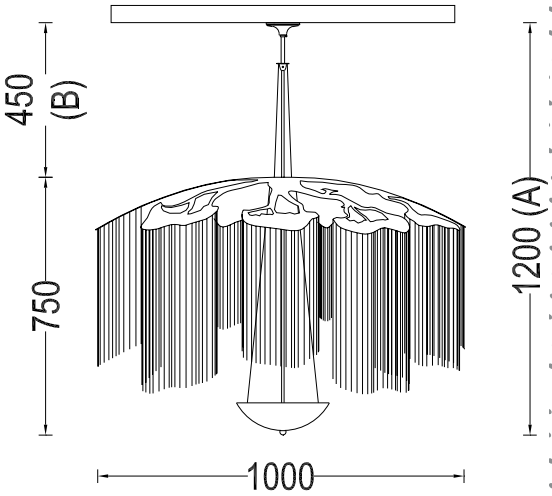

INTERACT

SELECT COLOUR

- SILVER *
- BRASS *
- COPPER *
- SMOKE *
- MIXED METALIC *
- RUST *
- WHITE
- RED
- BLACK

* METALLIC

CUSTOMISE DIMENSIONS

A
B

LAMP TYPE

QUANTITY

ADDITIONAL COMMENTS

WEB LINK DOWNLOAD

INDEX

FARAWAY TREE CHANDELIERS | FARAWAY TREE - 700 | FAT-700-S

DESCRIPTION

A chandelier inspired by trees constructed from a bowing 2D graphic metal frame. Made from lasercut stainless steel frames, chrome plated or lacqured, solid brass components and ballchain in several optional finishes. Illuminated by 3xGU.10 PAR-16 spotlights housed in a suspended uplighter dish.

PRODUCT SIZE

SHADE SIZE: 700W X 550H MM / TOTAL HEIGHT: 900MM

PACKAGING DIMENSIONS

810MM(W) X 810MM(L) X 330MM(H)

LAMP TYPE & NO

3 X GU.10-HALOGEN 50W (150W) OR 3X GU.10-5W LEDS

CLASS I
IP RATING 20
QC RATING 21

VOLTAGE RANGE
110 - 240V

PRODUCT MARKS & RATINGS

WEIGHT 8KG

PACKED WEIGHT 15KG

TECHNICAL DRAWING

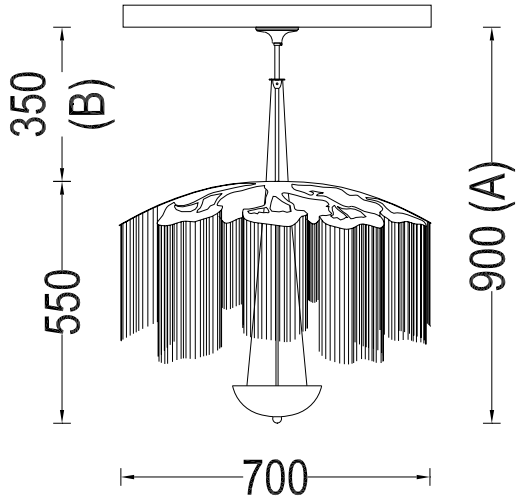

INTERACT

SELECT COLOUR

- SILVER *
- BRASS *
- COPPER *
- SMOKE *
- MIXED METALIC *
- RUST *
- WHITE
- RED
- BLACK

* METALLIC

CUSTOMISE DIMENSIONS

A
B

LAMP TYPE

QUANTITY

ADDITIONAL COMMENTS

WEB LINK DOWNLOAD

FARAWAY TREE CHANDELIERS | FARAWAY TREE - 500 | FAT-500-S

DESCRIPTION

A chandelier inspired by trees constructed from a bowing 2D graphic metal frame. Made from lasercut stainless steel frames, chrome plated or lacqured, solid brass components and ballchain in several optional finishes. Illuminated by 3xGU.10 PAR-16 spotlights housed in a suspended uplighter dish.

PRODUCT SIZE

SHADE SIZE: 500W X 400H MM / TOTAL HEIGHT: 700MM

PACKAGING DIMENSIONS

610MM(W) X 610MM(L) X 330MM(H)

LAMP TYPE & NO

3 X GU.10-HALOGEN 50W (150W) OR 3X GU.10-5W LEDS

CLASS I
IP RATING 20
QC RATING 21

VOLTAGE RANGE
110 - 240V

PRODUCT MARKS & RATINGS

WEIGHT 5KG

PACKED WEIGHT 10KG

TECHNICAL DRAWING

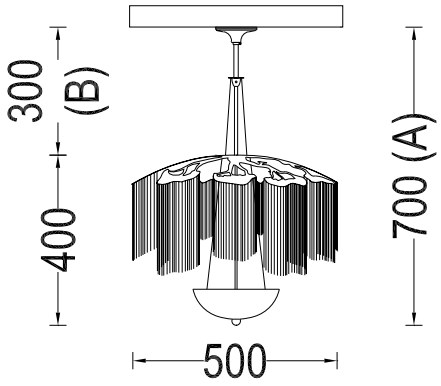

INTERACT

SELECT COLOUR

- SILVER *
- BRASS *
- COPPER *
- SMOKE *
- MIXED METALIC *
- RUST *
- WHITE
- RED
- BLACK

* METALLIC

CUSTOMISE DIMENSIONS

A
B

LAMP TYPE

QUANTITY

ADDITIONAL COMMENTS

WEB LINK DOWNLOAD

INDEX

FARAWAY TREE | FARAWAY TREE - WALL SCONCE - 450 | FAT-450-WS

DESCRIPTION

An extension of the existing 'faraway Tree' chandelier collection now also available as a matching wall sconce. Illuminated by 1x G9 Halogen/LED bulb within handmade clear or sandblasted pyrex glass ball with OR by 1x E27 vintage style LED bulb.
Can be ordered with a cropped straight edge finish or our feathered 'willow' edge finish.

PRODUCT SIZE

SHADE SIZE: 450X425W MM / TOTAL HEIGHT: 380-450MM

PACKAGING DIMENSIONS

560MM(W) X 560MM(L) X 390MM(H)

LAMP TYPE & NO

1 X G9-HALOGEN 18-40 WATT LAMP OR 1X G9-2.5W LED. OR E12/14 // E26/27 LED

CLASS II
IP RATING 54
QC RATING 21

VOLTAGE RANGE
110-240V

PRODUCT MARKS & RATINGS

WEIGHT 4KG

PACKED WEIGHT 6KG

TECHNICAL DRAWING

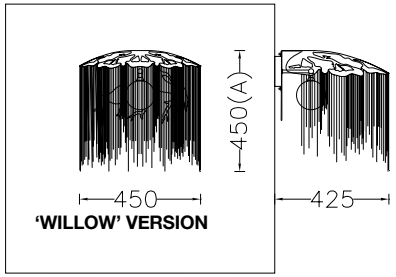

'WILLOW' VERSION

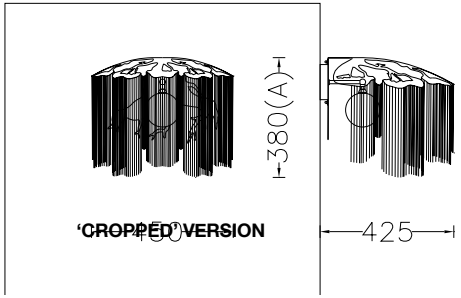

'CROPPED' VERSION

INTERACT

SELECT COLOUR

- SILVER *
- BRASS *
- COPPER *
- SMOKE *
- MIXED METALIC *
- RUST *
- WHITE
- RED
- BLACK

* METALLIC

CUSTOMISE DIMENSIONS

A
B

LAMP TYPE

QUANTITY

ADDITIONAL COMMENTS

WEB LINK DOWNLOAD

INDEX

FLOWER OF LIFE

Sacred geometry is the expression of geometry related to the evolution of consciousness, mind, body, and spirit in geometric terms. True sacred geometry is not just static angular forms. It is organic and living - it is in constant evolution (transcendence) or devolution (materialisation), ascending or descending from one form to another.

FLOWER OF LIFE

DESCRIPTION

THE ORIGINAL, ICONIC AWARD-WINNING WILLOWLAMP DESIGN, BASED ON THE SACRED GEOMETRY KNOWN AS THE 'FLOWER OF LIFE'. THIS IS AN ELEGANT AND INTRICATE MULTI-LEVELLED CHANDELIER THAT EVOKES A CLASSIC 1920S STYLE. THIS DESIGN HAS BEEN COVERED BY A ETL RATING FOR THE USA AND CANADA. IT IS AVAILABLE AS BOTH A CEILING MOUNTED OR SUSPENDED MODEL IN THREE SIZES AND AS A WALL SCONCE.

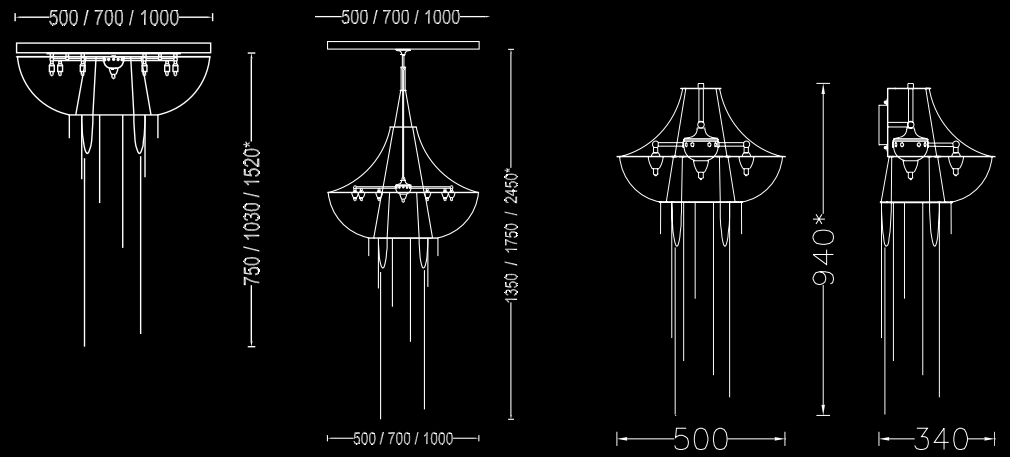

MODEL	SHADE SIZE	TOTAL HEIGHT
FLOWER OF LIFE - 1000 - SUSPENDED	1000W X 1175H MM	2450MM
FLOWER OF LIFE - 700 - SUSPENDED	700W X 825H MM	1750MM
FLOWER OF LIFE - 500 - SUSPENDED	500W X 630H MM	1350MM
FLOWER OF LIFE - 1000 - CEILING MOUNTED	1000W X 520H MM	1520MM
FLOWER OF LIFE - 700 - CEILING MOUNTED	700W X 400H MM	1030MM
FLOWER OF LIFE - 500 - CEILING MOUNTED	500W X 275H MM	750MM
FLOWER OF LIFE - 500 - WALL SCONCE	500 X 340W MM	940MM

FLOWER OF LIFE | FLOWER OF LIFE - 1000 - SUSPENDED | FOLC-1000-S

DESCRIPTION

A suspended chandelier inspired by the sacred geometry known as the` flower of life`. Made from lasercut stainless steel frames, chrome plated or lacqured, solid brass components and ballchain in several optional finishes. Illuminated by 19 surface mounted G9 Halogen or LED lamps.

PRODUCT SIZE

SHADE SIZE: 1000W X 1175H MM / TOTAL HEIGHT: 2450MM

PACKAGING DIMENSIONS

1140MM(W) X 1140MM(L) X 390MM(H)

LAMP TYPE & NO

19 X G9-HALOGEN 18-40 WATT LAMPS (342-760W)
OR 19X G9-2.5W LEDS

CLASS I
IP RATING 20
QC RATING 21

VOLTAGE RANGE
110 - 240V

PRODUCT MARKS & RATINGS

WEIGHT 20KG
PACKED WEIGHT 34KG

TECHNICAL DRAWING

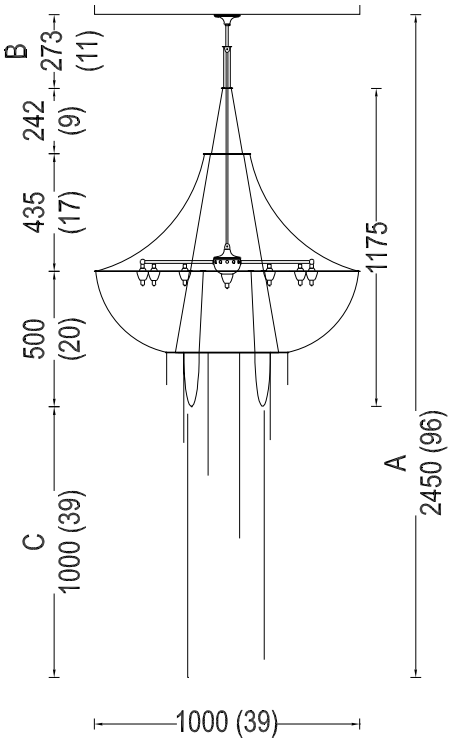

INTERACT

SELECT COLOUR

- SILVER *
- BRASS *
- COPPER *
- SMOKE *
- MIXED METALIC *
- RUST *
- WHITE
- RED
- BLACK

* METALLIC

CUSTOMISE DIMENSIONS

A
B
C

LAMP TYPE

QUANTITY

ADDITIONAL COMMENTS

WEB LINK **DOWNLOAD**

INDEX

FLOWER OF LIFE | FLOWER OF LIFE - 700 - SUSPENDED | FOLC-700-S

DESCRIPTION

A suspended chandelier inspired by the sacred geometry known as the` flower of life`. Made from lasercut stainless steel frames, chrome plated or lacqured, solid brass components and ballchain in several optional finishes. Illuminated by 13 surface mounted G9 Halogen lamps.

PRODUCT SIZE

SHADE SIZE: 700W X 825H MM / TOTAL HEIGHT: 1750MM

PACKAGING DIMENSIONS

810MM(W) X 810MM(L) X 330MM(H)

LAMP TYPE & NO

13 X G9-HALOGEN 18-40 WATT LAMPS (234-520W)
OR 13X G9-2.5W LEDS

CLASS I
IP RATING 20
QC RATING 21

VOLTAGE RANGE
110 - 240V

PRODUCT MARKS & RATINGS

WEIGHT 9KG
PACKED WEIGHT 17KG

TECHNICAL DRAWING

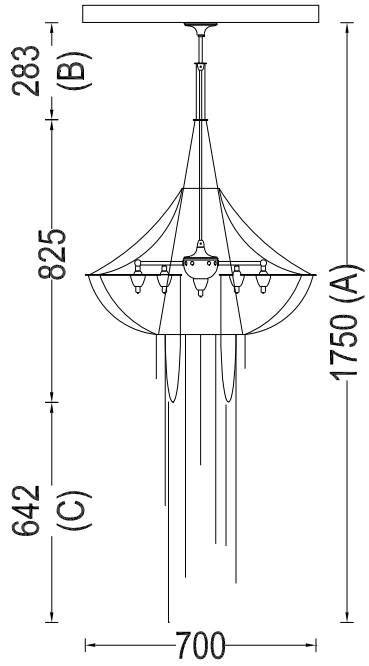

INTERACT

SELECT COLOUR

- SILVER *
- BRASS *
- COPPER *
- SMOKE *
- MIXED METALIC *
- RUST *
- WHITE
- RED
- BLACK

* METALLIC

CUSTOMISE DIMENSIONS

A
B
C

LAMP TYPE

QUANTITY

ADDITIONAL COMMENTS

WEB LINK DOWNLOAD

INDEX

FLOWER OF LIFE | FLOWER OF LIFE - 500 - SUSPENDED | FOLC-500-S

DESCRIPTION

A suspended chandelier inspired by the sacred geometry known as the` flower of life`. Made from lasercut stainless steel frames, chrome plated or lacquered, solid brass components and ballchain in several optional finishes. Illuminated by 7 surface mounted G9 Halogen lamps.

PRODUCT SIZE

SHADE SIZE: 500W X 630H MM / TOTAL HEIGHT: 1350MM

PACKAGING DIMENSIONS

610MM(W) X 610MM(L) X 330MM(H)

LAMP TYPE & NO

7 X G9-HALOGEN 18-40 WATT LAMPS (126-280W) OR
7X G9-2.5W LEDS

CLASS I
IP RATING 20
QC RATING 21

VOLTAGE RANGE
110 - 240V

PRODUCT MARKS & RATINGS

WEIGHT 6KG

PACKED WEIGHT 10KG

TECHNICAL DRAWING

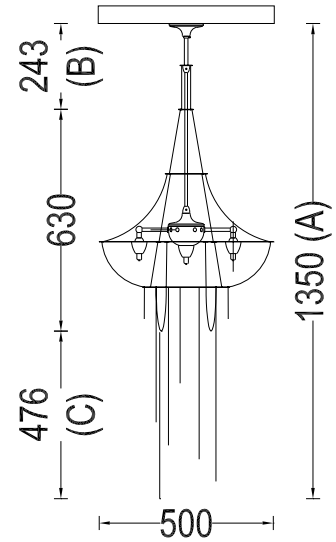

INTERACT

SELECT COLOUR

- SILVER *
- BRASS *
- COPPER *
- SMOKE *
- MIXED METALIC *
- RUST *
- WHITE
- RED
- BLACK

* METALLIC

CUSTOMISE DIMENSIONS

A
B
C

LAMP TYPE

QUANTITY

ADDITIONAL COMMENTS

WEB LINK DOWNLOAD

INDEX

FLOWER OF LIFE | FLOWER OF LIFE - 1000 - CEILING MOUNTED | FOLC-1000-C

DESCRIPTION

A ceiling mounted chandelier inspired by the sacred geometry known as the` flower of life`. Made from lasercut stainless steel frames, chrome plated or lacqured, solid brass components and ballchain in several optional finishes. Illuminated by 19 surface mounted G9 Halogen lamps.

PRODUCT SIZE

SHADE SIZE: 1000W X 520H MM / TOTAL HEIGHT: 1520MM

PACKAGING DIMENSIONS

1140MM(W) X 1140MM(L) X 390MM(H)

LAMP TYPE & NO

19 X G9-HALOGEN 18-40 WATT LAMPS (342-760W)
OR 19X G9-2.5W LEDS

CLASS I
IP RATING 20
QC RATING 21

VOLTAGE RANGE
110 - 240V

PRODUCT MARKS & RATINGS

WEIGHT 25KG
PACKED WEIGHT 39KG

TECHNICAL DRAWING

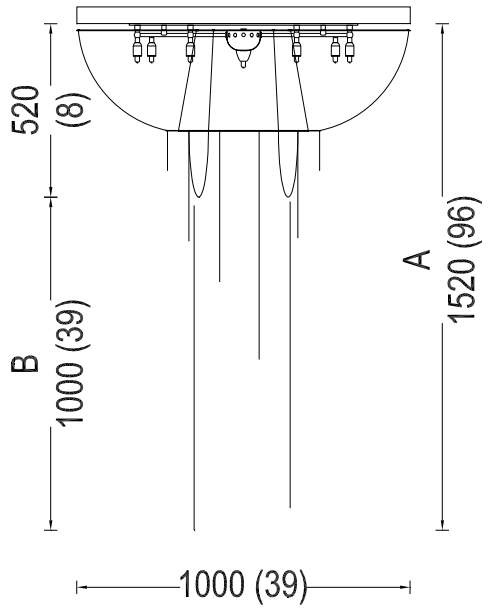

INTERACT

SELECT COLOUR

- SILVER *
- BRASS *
- COPPER *
- SMOKE *
- MIXED METALIC *
- RUST *
- WHITE
- RED
- BLACK

* METALLIC

CUSTOMISE DIMENSIONS

A
B

LAMP TYPE

QUANTITY

ADDITIONAL COMMENTS

WEB LINK | DOWNLOAD

INDEX
87

FLOWER OF LIFE | FLOWER OF LIFE - 700 - CEILING MOUNTED | FOLC-700-C

DESCRIPTION

A ceiling mounted chandelier inspired by the sacred geometry known as the` flower of life`. Made from lasercut stainless steel frames, chrome plated or lacqured, solid brass components and ballchain in several optional finishes. Illuminated by 13 surface mounted G9 Halogen lamps.

PRODUCT SIZE

SHADE SIZE: 700W X 400H MM / TOTAL HEIGHT: 1030MM

PACKAGING DIMENSIONS

810MM(W) X 810MM(L) X 330MM(H)

LAMP TYPE & NO

13 X G9-HALOGEN 18-40 WATT LAMPS (234-520W)
OR 13X G9-2.5W LEDS

CLASS I
IP RATING 20
QC RATING 21

VOLTAGE RANGE
110 - 240V

PRODUCT MARKS & RATINGS CE

WEIGHT 10KG
PACKED WEIGHT 18KG

TECHNICAL DRAWING

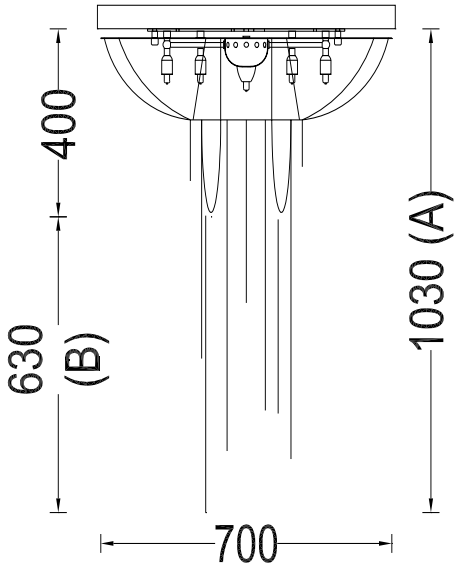

INTERACT

SELECT COLOUR

- SILVER *
- BRASS *
- COPPER *
- SMOKE *
- MIXED METALIC *
- RUST *
- WHITE
- RED
- BLACK

* METALLIC

CUSTOMISE DIMENSIONS

A
B

LAMP TYPE

QUANTITY

ADDITIONAL COMMENTS

WEB LINK DOWNLOAD

INDEX

FLOWER OF LIFE | FLOWER OF LIFE - 500 - CEILING MOUNTED | FOLC-500-C

DESCRIPTION

A ceiling mounted chandelier inspired by the sacred geometry known as the` flower of life`. Made from lasercut stainless steel frames, chrome plated or lacqured, solid brass components and ballchain in several optional finishes. Illuminated by 7 surface mounted G9 Halogen lamps.

PRODUCT SIZE

SHADE SIZE: 500W X 275H MM / TOTAL HEIGHT: 750MM

PACKAGING DIMENSIONS

610MM(W) X 610MM(L) X 330MM(H)

LAMP TYPE & NO

7 X G9-HALOGEN 18-40 WATT LAMPS (126-280W) OR
7X G9-2.5W LEDS

CLASS I
IP RATING 20
QC RATING 21

VOLTAGE RANGE
110 - 240V

PRODUCT MARKS & RATINGS

WEIGHT 7KG

PACKED WEIGHT 11KG

TECHNICAL DRAWING

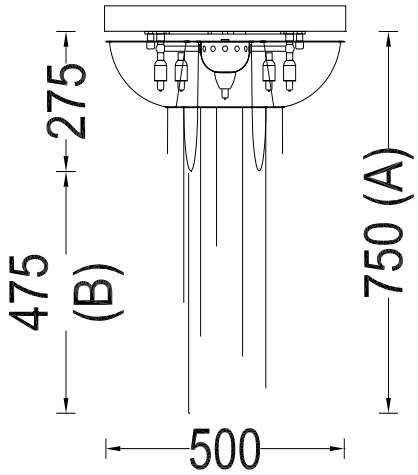

INTERACT

SELECT COLOUR

- SILVER *
- BRASS *
- COPPER *
- SMOKE *
- MIXED METALIC *
- RUST *
- WHITE
- RED
- BLACK

* METALLIC

CUSTOMISE DIMENSIONS

A
B

LAMP TYPE

QUANTITY

ADDITIONAL COMMENTS

WEB LINK DOWNLOAD

INDEX

FLOWER OF LIFE | FLOWER OF LIFE - WALL SCONCE - 500 | FOLC-500-WS

DESCRIPTION

An extension of the existing 'Flower of Life' chandelier collection now also available as a matching wall sconce. Illuminated by 5x G9-Halogen or G9-LED lamps.

PRODUCT SIZE

SHADE SIZE: 500X340W MM / TOTAL HEIGHT: 940MM

PACKAGING DIMENSIONS

430MM(W) X 600MM(L) X 390MM(H)

LAMP TYPE & NO

5 X G9-HALOGEN 18-40 WATT LAMPS (90-200W) OR
4X G9-2.5W LEDS

CLASS II
IP RATING 20
QC RATING 21

VOLTAGE RANGE
110-240V

PRODUCT MARKS & RATINGS

WEIGHT 4KG

PACKED WEIGHT 7KG

TECHNICAL DRAWING

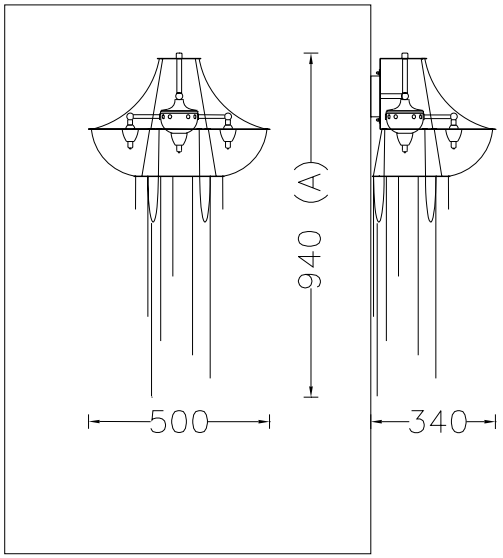

INTERACT

SELECT COLOUR

- SILVER *
- BRASS *
- COPPER *
- SMOKE *
- MIXED METALIC *
- RUST *
- WHITE
- RED
- BLACK

* METALLIC

CUSTOMISE DIMENSIONS

A
B

LAMP TYPE

QUANTITY

ADDITIONAL COMMENTS

WEB LINK DOWNLOAD

protea

PROTEA CHANDELIER & WALL SCONCE

DESCRIPTION

AN ICONIC CHANDELIER IN THE FORM OF THE PROTEA, SOUTH AFRICA'S NATIONAL FLOWER. DESIGNED USING SACRED GEOMETRY, THE CREATION IS CHARACTERISED BY MULTIPLE TIERS WITH THE CHAIN HUNG IN LAYERS OF LOOPED 'PETALS'. THIS DESIGN HAS BEEN COVERED BY A ETL RATING FOR THE USA AND CANADA. IT IS AVAILABLE AS BOTH A CEILING MOUNTED OR SUSPENDED MODEL IN THREE SIZES.

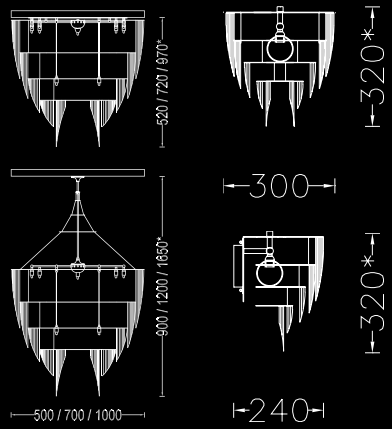

MODEL	SHADE SIZE	TOTAL HEIGHT	
PROTEA - 1000 - SUSPENDED	1000W X 950H MM	1650MM	
PROTEA - 700 - SUSPENDED	700W X 700H MM	1200MM	
PROTEA - 500 - SUSPENDED	500W X 500H MM	900MM	
PROTEA - 1000 - CEILING MOUNTED	1000W X 950H MM	970MM	
PROTEA - 700 - CEILING MOUNTED	700W X 700H MM	720MM	
PROTEA - 500 - CEILING MOUNTED	500W X 500H MM	520MM	
PROTEA - 300 - WALL SCONCE	300 X 320W MM	320MM	

PROTEA CHANDELIERS | PROTEA - 1000 - SUSPENDED | PROTEA-1000-S

DESCRIPTION

A suspended chandelier inspired by the South Africa`s national flower the `Protea`. Made from lasercut stainless steel frames, chrome plated or lacqured, solid brass components and ballchain in several optional finishes. Illuminated by 19 surface mounted G9 Halogen lamps.

PRODUCT SIZE

SHADE SIZE: 1000W X 950H MM / TOTAL HEIGHT: 1650MM

PACKAGING DIMENSIONS

1140MM(W) X 1140MM(L) X 390MM(H)

LAMP TYPE & NO

19 X G9-HALOGEN 18-40 WATT LAMPS (342-760W)
OR 19X G9-2.5W LEDS

CLASS I
IP RATING 20
QC RATING 21

VOLTAGE RANGE
110 - 240V

PRODUCT MARKS & RATINGS

WEIGHT 26KG

PACKED WEIGHT 40KG

TECHNICAL DRAWING

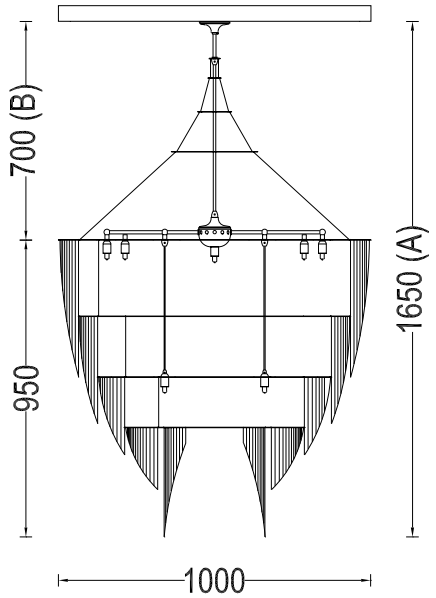

INTERACT

SELECT COLOUR

- SILVER *
- BRASS *
- COPPER *
- SMOKE *
- MIXED METALIC *
- RUST *
- WHITE
- RED
- BLACK

* METALLIC

CUSTOMISE DIMENSIONS

A
B

LAMP TYPE

QUANTITY

ADDITIONAL COMMENTS

WEB LINK DOWNLOAD

INDEX

PROTEA CHANDELIERS | PROTEA - 700 - SUSPENDED | PROTEA-700-S

DESCRIPTION

A suspended chandelier inspired by the South Africa`s national flower the `Protea`. Made from lasercut stainless steel frames, chrome plated or lacqured, solid brass components and ballchain in several optional finishes. Illuminated by 13 surface mounted G9 Halogen lamps.

PRODUCT SIZE

SHADE SIZE: 700W X 700H MM / TOTAL HEIGHT: 1200MM

PACKAGING DIMENSIONS

810MM(W) X 810MM(L) X 330MM(H)

LAMP TYPE & NO

13 X G9-HALOGEN 18-40 WATT LAMPS (234-520W)
OR 13X G9-2.5W LEDS

CLASS I
IP RATING 20
QC RATING 21

VOLTAGE RANGE
110 - 240V

PRODUCT MARKS & RATINGS

WEIGHT 14KG

PACKED WEIGHT 22KG

TECHNICAL DRAWING

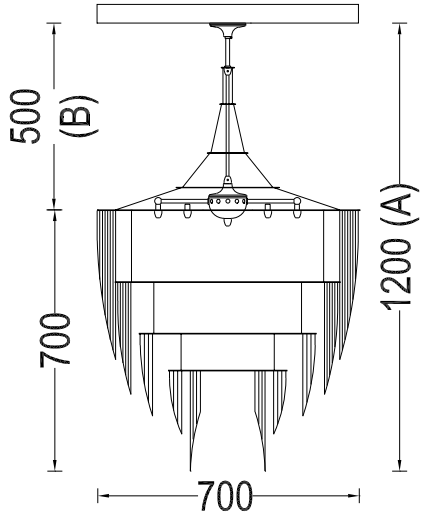

INTERACT

SELECT COLOUR

- SILVER *
- BRASS *
- COPPER *
- SMOKE *
- MIXED METALIC *
- RUST *
- WHITE
- RED
- BLACK

* METALLIC

CUSTOMISE DIMENSIONS

A
B

LAMP TYPE

QUANTITY

ADDITIONAL COMMENTS

WEB LINK **DOWNLOAD**

PROTEA CHANDELIERS | PROTEA - 500 - SUSPENDED | PROTEA-500-S

DESCRIPTION

A suspended chandelier inspired by the South Africa`s national flower the `Protea`. Made from lasercut stainless steel frames, chrome plated or lacquered, solid brass components and ballchain in several optional finishes. Illuminated by 7 surface mounted G9 Halogen lamps.

PRODUCT SIZE

SHADE SIZE: 500W X 500H MM / TOTAL HEIGHT: 900MM

PACKAGING DIMENSIONS

610MM(W) X 610MM(L) X 330MM(H)

LAMP TYPE & NO

7 X G9-HALOGEN 18-40 WATT LAMPS (126-280W) OR
4X G9-2.5W LEDS

CLASS I
IP RATING 20
QC RATING 21

VOLTAGE RANGE
110 - 240V

PRODUCT MARKS & RATINGS

WEIGHT 7KG

PACKED WEIGHT 12KG

TECHNICAL DRAWING

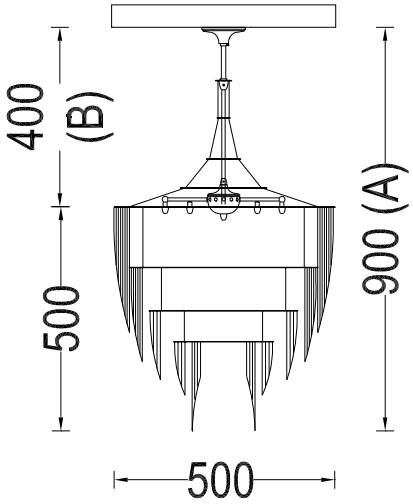

INTERACT

SELECT COLOUR

- SILVER *
- BRASS *
- COPPER *
- SMOKE *
- MIXED METALIC *
- RUST *
- WHITE
- RED
- BLACK

* METALLIC

CUSTOMISE DIMENSIONS

A
B

LAMP TYPE

QUANTITY

ADDITIONAL COMMENTS

WEB LINK **DOWNLOAD**

INDEX

PROTEA CHANDELIERS | PROTEA - 1000 - CEILING MOUNTED | PROTEA-1000-C

DESCRIPTION

A ceiling mounted chandelier inspired by the South Africa`s national flower the `Protea`. Made from lasercut stainless steel frames, chrome plated or lacqured, solid brass components and ballchain in several optional finishes. Illuminated by 19 surface mounted G9 Halogen lamps.

PRODUCT SIZE

SHADE SIZE: 1000W X 950H MM / TOTAL HEIGHT: 970MM

PACKAGING DIMENSIONS

1140MM(W) X 1140MM(L) X 390MM(H)

LAMP TYPE & NO

19 X G9-HALOGEN 18-40 WATT LAMPS (342-760W)
OR 19X G9-2.5W LEDS

CLASS I
IP RATING 20
QC RATING 21

VOLTAGE RANGE
110 - 240V

PRODUCT MARKS & RATINGS

WEIGHT 28KG
PACKED WEIGHT 42KG

TECHNICAL DRAWING

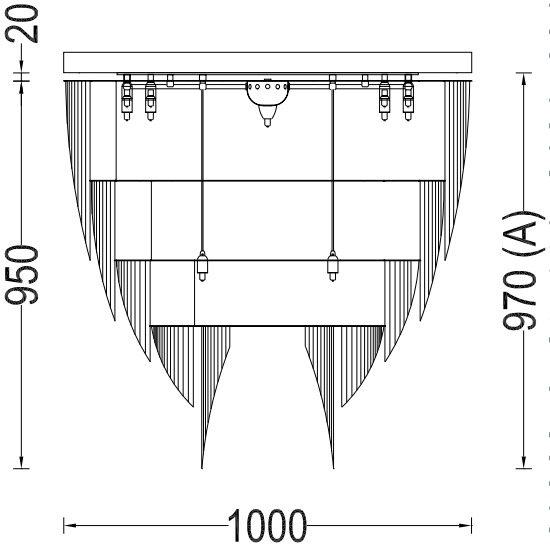

INTERACT

SELECT COLOUR

- SILVER *
- BRASS *
- COPPER *
- SMOKE *
- MIXED METALIC *
- RUST *
- WHITE
- RED
- BLACK

* METALLIC

CUSTOMISE DIMENSIONS

A

LAMP TYPE

QUANTITY

ADDITIONAL COMMENTS

WEB LINK DOWNLOAD

INDEX

PROTEA CHANDELIERS | PROTEA - 700 - CEILING MOUNTED | PROTEA-700-C

DESCRIPTION

A ceiling mounted chandelier inspired by the South Africa`s national flower the `Protea`. Made from lasercut stainless steel frames, chrome plated or lacqured, solid brass components and ballchain in several optional finishes. Illuminated by 13 surface mounted G9 Halogen lamps.

PRODUCT SIZE

SHADE SIZE: 700W X 700H MM / TOTAL HEIGHT: 720MM

PACKAGING DIMENSIONS

810MM(W) X 810MM(L) X 330MM(H)

LAMP TYPE & NO

13 X G9-HALOGEN 18-40 WATT LAMPS (234-520W)
OR 13X G9-2.5W LEDS

CLASS I
IP RATING 20
QC RATING 21

VOLTAGE RANGE
110 - 240V

PRODUCT MARKS & RATINGS CE

WEIGHT 15KG

PACKED WEIGHT 23KG

TECHNICAL DRAWING

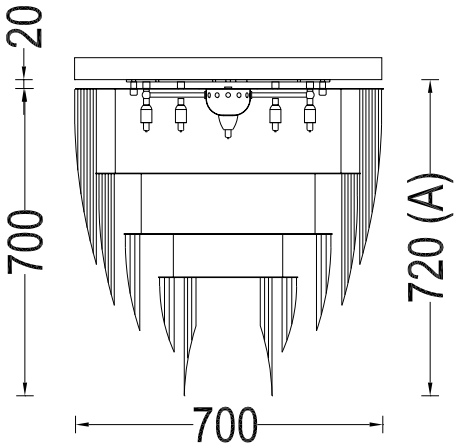

INTERACT

SELECT COLOUR

- SILVER *
- BRASS *
- COPPER *
- SMOKE *
- **MIXED METALIC ***
- RUST *
- WHITE
- RED
- BLACK

* METALLIC

CUSTOMISE DIMENSIONS

A

LAMP TYPE

QUANTITY

ADDITIONAL COMMENTS

WEB LINK **DOWNLOAD**

INDEX

PROTEA CHANDELIERS | PROTEA - 500 - CEILING MOUNTED | PROTEA-500-C

DESCRIPTION

A ceiling mounted chandelier inspired by the South Africa`s national flower the `Protea`. Made from lasercut stainless steel frames, chrome plated or lacqured, solid brass components and ballchain in several optional finishes. Illuminated by 7 surface mounted G9 Halogen lamps.

PRODUCT SIZE

SHADE SIZE: 500W X 500H MM / TOTAL HEIGHT: 520MM

PACKAGING DIMENSIONS

610MM(W) X 610MM(L) X 330MM(H)

LAMP TYPE & NO

7 X G9-HALOGEN 18-40 WATT LAMPS (126-280W) OR
4X G9-2.5W LEDS

CLASS I
IP RATING 20
QC RATING 21

VOLTAGE RANGE
110 - 240V

PRODUCT MARKS & RATINGS CE

WEIGHT 8KG

PACKED WEIGHT 13KG

TECHNICAL DRAWING

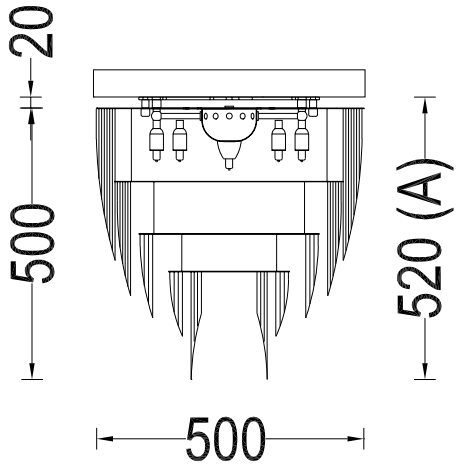

INTERACT

SELECT COLOUR

- SILVER *
- BRASS *
- COPPER *
- SMOKE *
- MIXED METALIC *
- RUST *
- WHITE
- RED
- BLACK

* METALLIC

CUSTOMISE DIMENSIONS

A

LAMP TYPE

QUANTITY

ADDITIONAL COMMENTS

WEB LINK **DOWNLOAD**

INDEX

PROTEA | PROTEA - WALL SCONCE - 300 | PROTEA-300-WS

DESCRIPTION

An extension of the existing 'Protea' chandelier collection now also available as a matching wall sconce. Illuminated by 1x G9 Halogen/LED bulb within handmade clear or sandblasted pyrex glass ball with OR by 1x E27 vintage style LED bulb.

PRODUCT SIZE

SHADE SIZE: 300X320W MM / TOTAL HEIGHT: 320MM

PACKAGING DIMENSIONS

330MM(W) X 400MM(L) X 320MM(H)

LAMP TYPE & NO

1 X G9-HALOGEN 18-40 WATT LAMP OR 1X G9-2.5W LED. OR E12/14 // E26/27 LED

CLASS I
IP RATING 54
QC RATING 21

VOLTAGE RANGE
110-240V

PRODUCT MARKS & RATINGS CE

WEIGHT 5KG
PACKED WEIGHT 7KG

TECHNICAL DRAWING

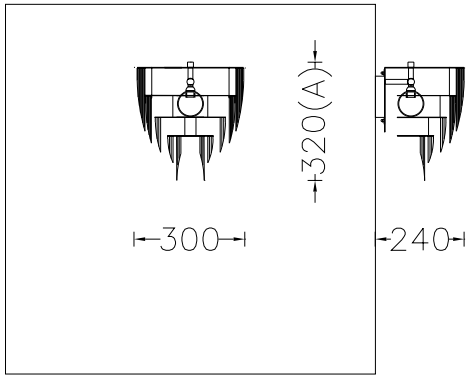

INTERACT

SELECT COLOUR

- SILVER *
- BRASS *
- COPPER *
- SMOKE *
- MIXED METALIC *
- RUST *
- WHITE
- RED
- BLACK

* METALLIC

CUSTOMISE DIMENSIONS

A
B

LAMP TYPE

QUANTITY

ADDITIONAL COMMENTS

WEB LINK DOWNLOAD

INDEX

FUSCHIA CHANDELIER

FUSCHIA CHANDELIER

DESCRIPTION

A CHANDELIER DESIGN BASED ON THE FORM OF DANGLING FUSCHIA FLOWERS WITH THE METAL 'PETALS' BOWING UNDER THE WEIGHT OF THE CHAIN. ILLUMINATED BY A SUSPENDED SPIRALLING ARRANGEMENT OF PYREX GLASS BALLS CONTAINING G4-HALOGEN 20 WATT 12V LAMPS. THIS DESIGN HAS AN ETL RATING FOR THE USA AND CANADA. AVAILABLE IN TWO SIZES.

MODEL	SHADE SIZE	TOTAL HEIGHT
FUSCHIA - 1000	1000W X 1000H MM	1500MM
FUSCHIA - 700	700W X 700H MM	1150MM

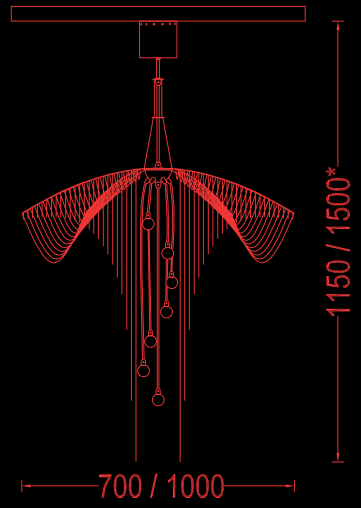

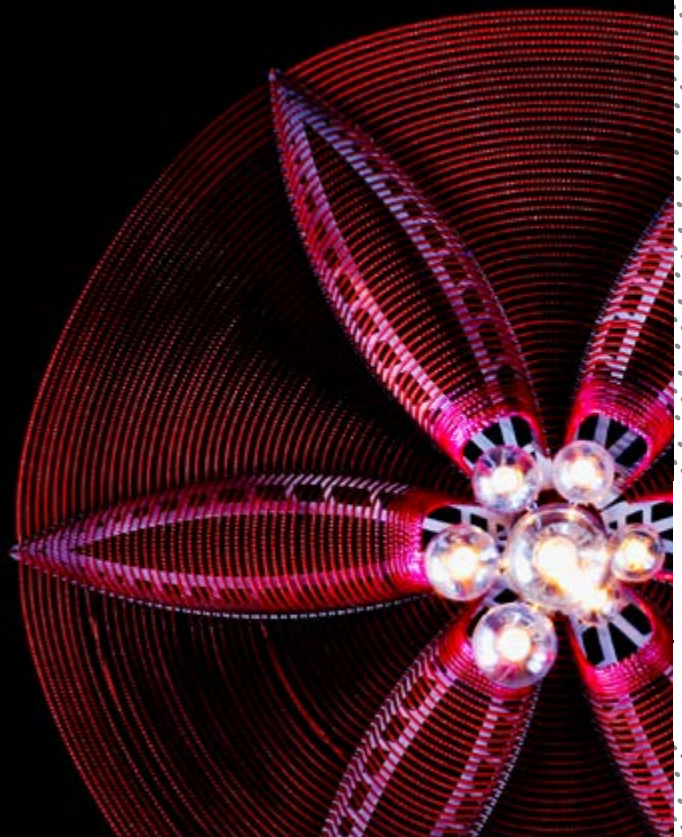

FUSHCIA CHANDELIERS | FUSCHIA - 1000 | FUSCHIA-1000-S

DESCRIPTION

A chandelier design based on the form of Fuschia flowers. Made from lasercut stainless steel frames, chrome plated or lacqured, solid brass components and ballchain in several optional finishes. Illuminated by suspended spiraling arrangement of 7 pyrex glass balls containing G4-Halogen 20 Watt 12V lamps.

PRODUCT SIZE

SHADE SIZE: 1000W X 1000H MM / TOTAL HEIGHT: 1500MM

PACKAGING DIMENSIONS

1140MM(W) X 1140MM(L) X 300MM(H)

LAMP TYPE & NO

7 X G4-HALOGEN 12V 20 WATT LAMPS (140W) OR 7X G4-2W LEDS OR 7X E12/14 LEDS

CLASS III
IP RATING 52
QC RATING 21

VOLTAGE RANGE
12V

PRODUCT MARKS & RATINGS

WEIGHT 8KG

PACKED WEIGHT 21KG

TECHNICAL DRAWING

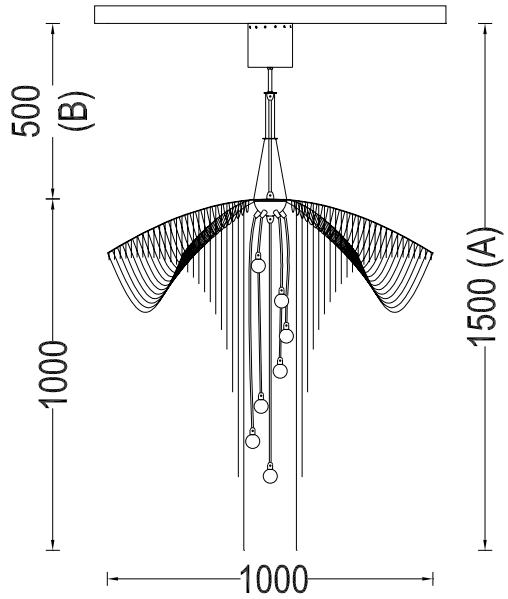

INTERACT

SELECT COLOUR

- SILVER *
- BRASS *
- COPPER *
- SMOKE *
- MIXED METALIC *
- RUST *
- WHITE
- RED
- BLACK

* METALLIC

CUSTOMISE DIMENSIONS

A
B

LAMP TYPE

QUANTITY

ADDITIONAL COMMENTS

WEB LINK **DOWNLOAD**

INDEX

FUSHCIA CHANDELIERS | FUSCHIA - 700 | FUSCHIA-700-S

DESCRIPTION

A chandelier design based on the form of Fuschia flowers. Made from lasercut stainless steel frames, chrome plated or lacqured, solid brass components and ballchain in several optional finishes. Illuminated by suspended spiraling arrangement of 5 pyrex glass balls containing G4-Halogen 20 Watt 12V lamps.

PRODUCT SIZE

SHADE SIZE: 700W X 700H MM / TOTAL HEIGHT: 1150MM

PACKAGING DIMENSIONS

810MM(W) X 810MM(L) X 330MM(H)

LAMP TYPE & NO

7 X G4-HALOGEN 12V 20 WATT LAMPS (140W) OR 7X G4-2W LEDS OR 7X E12/14 LEDS

CLASS III
IP RATING 52
QC RATING 21

VOLTAGE RANGE
12V

PRODUCT MARKS & RATINGS

WEIGHT 5KG
PACKED WEIGHT 13KG

TECHNICAL DRAWING

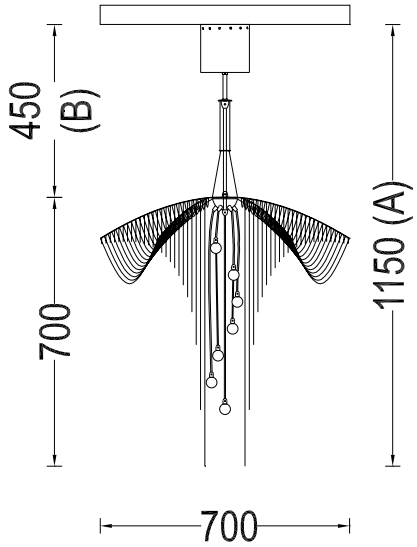

INTERACT

SELECT COLOUR

- SILVER *
- BRASS *
- COPPER *
- SMOKE *
- MIXED METALIC *
- RUST *
- WHITE
- RED
- BLACK

* METALLIC

CUSTOMISE DIMENSIONS

A
B

LAMP TYPE

QUANTITY

ADDITIONAL COMMENTS

WEB LINK **DOWNLOAD**

INDEX

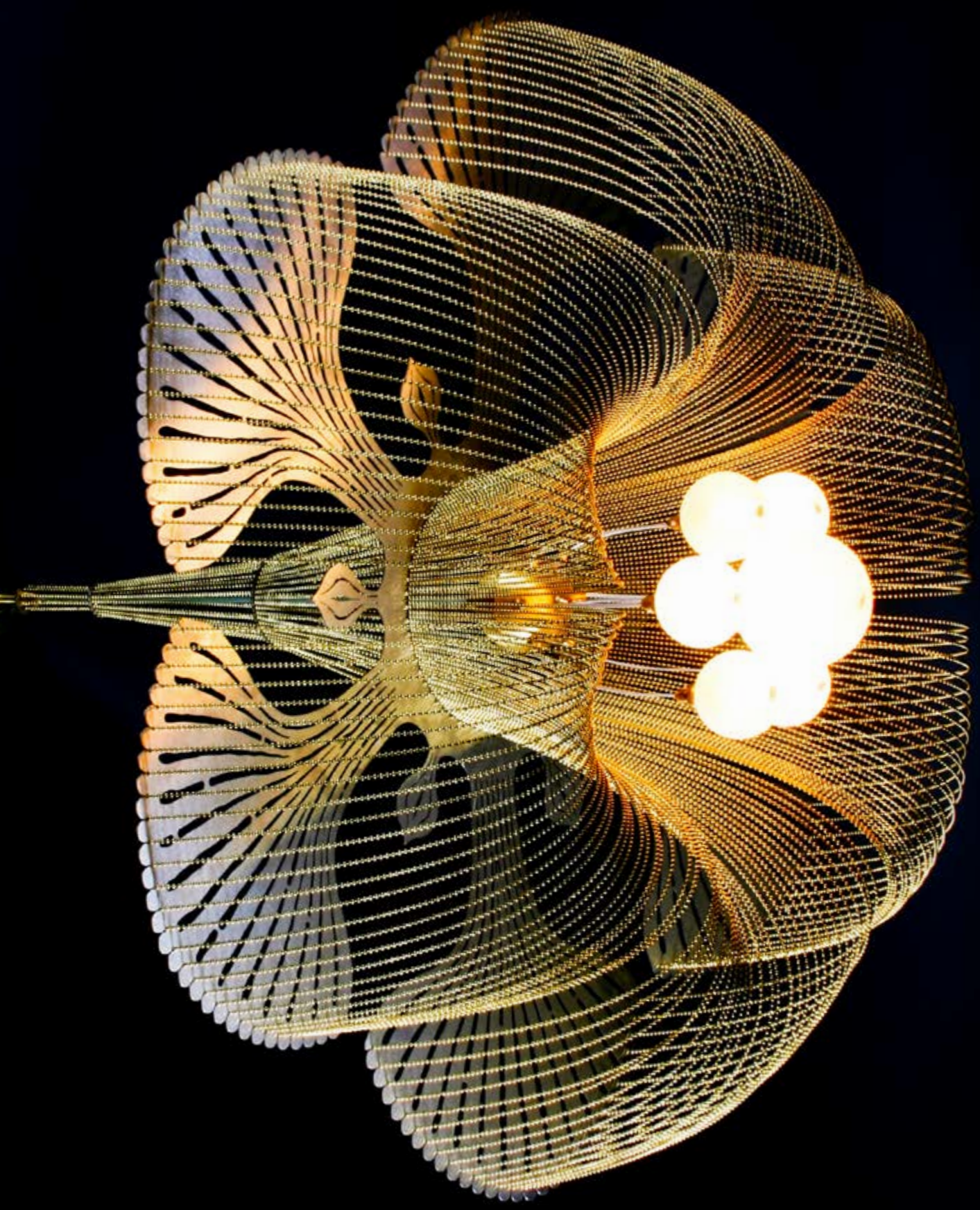

MOONFLOWER CHANDELIERS

MOONFLOWER CHANDELIERS

DESCRIPTION

A WHIMSICAL CHANDELIER DESIGN BASED ON THE HANGING FLOWER FORM OF THE MOONFLOWER. THE 'PETALS' ARE DEFINED BY VOLUPTUOUS BALLCHAIN LOBES. ILLUMINATED BY A CLUSTER OF STAMEN-LIKE FROSTED PYREX GLASS VISORS CONTAINING G9 HALOGEN LAMPS. THIS DESIGN HAS BEEN COVERED BY AN ETL RATING FOR THE USA AND CANADA. AVAILABLE IN THREE SIZES.

MODEL	SHADE SIZE	TOTAL HEIGHT
MOONFLOWER - 1000	1000W X 830H MM	1150MM
MOONFLOWER - 700	700W X 580H MM	950MM
MOONFLOWER - 500	500W X 450H MM	800MM

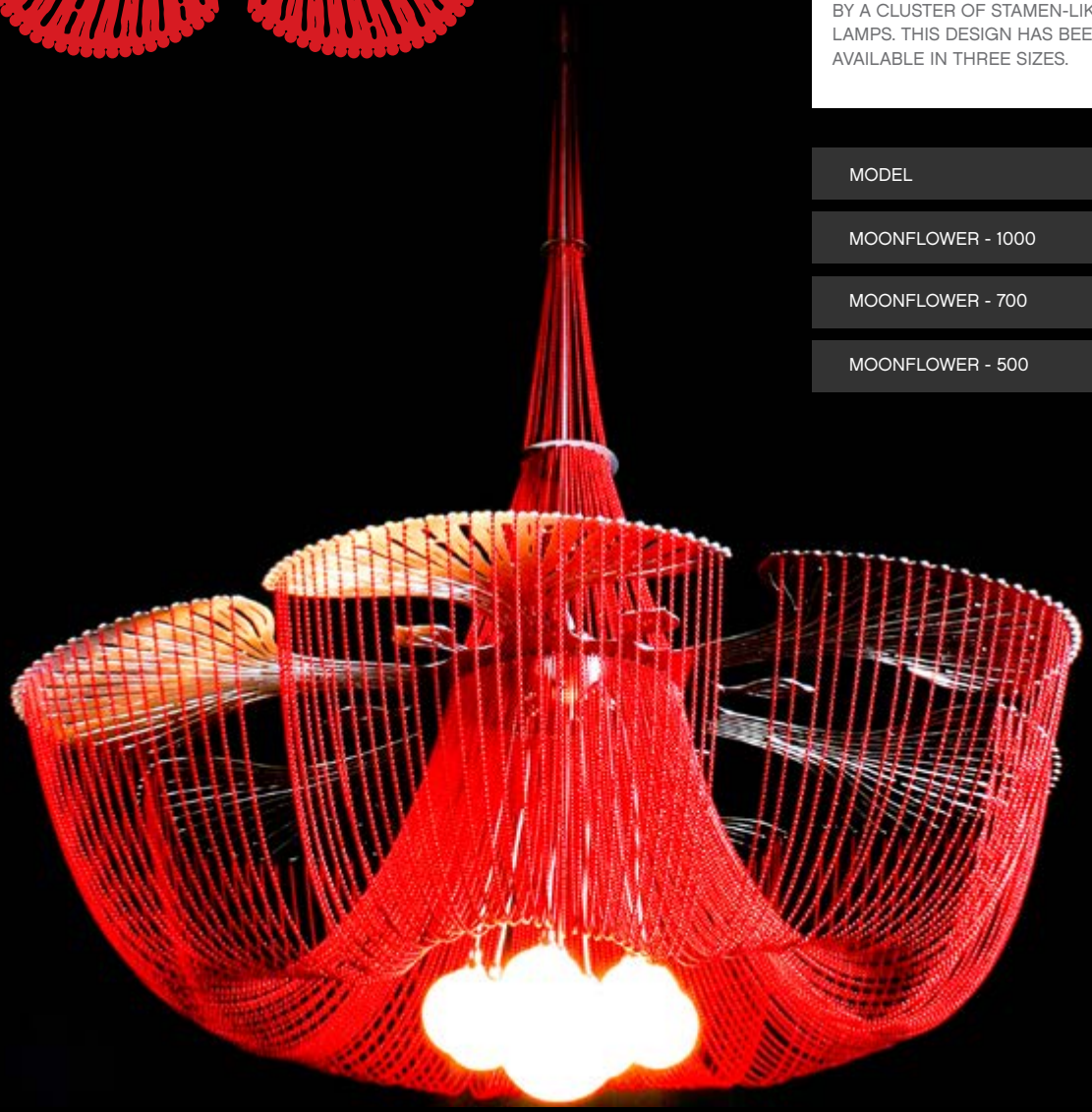

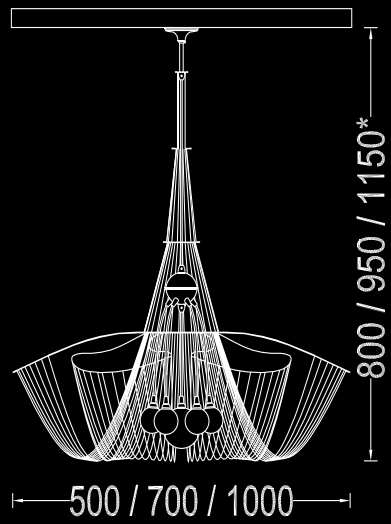

MOONFLOWER CHANDELIERS | MOONFLOWER - 1000 | MOON-1000-S

DESCRIPTION

A chandelier design based on the form of Moonflower. Made from lasercut stainless steel frames, chrome plated or lacqured, solid brass components and ballchain in several optional finishes. Illuminated by suspended cluster arrangement of 7 pyrex glass balls containing G9-Halogen lamps.

PRODUCT SIZE

SHADE SIZE: 1000W X 830H MM / TOTAL HEIGHT: 1150MM

PACKAGING DIMENSIONS

1140MM(W) X 1140MM(L) X 390MM(H)

LAMP TYPE & NO

7 X G9-HALOGEN 18-40 WATT LAMPS (126-280W) OR
7X G9-2.5W LEDS OR 7X E12/14 OR E26/27 LEDS

CLASS II
IP RATING 54
QC RATING 21

VOLTAGE RANGE
110 - 240V

PRODUCT MARKS & RATINGS

WEIGHT 9KG

PACKED WEIGHT 22KG

TECHNICAL DRAWING

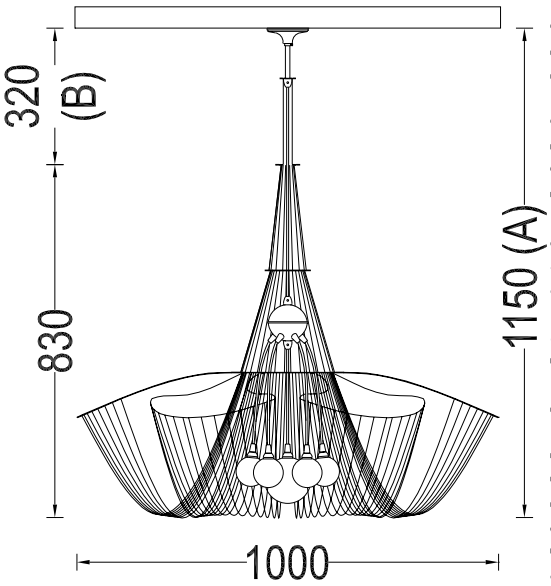

INTERACT

SELECT COLOUR

- SILVER *
- BRASS *
- COPPER *
- SMOKE *
- MIXED METALIC *
- RUST *
- WHITE
- RED
- BLACK

* METALLIC

CUSTOMISE DIMENSIONS

A
B

LAMP TYPE

QUANTITY

ADDITIONAL COMMENTS

WEB LINK DOWNLOAD

INDEX

MOONFLOWER CHANDELIERS | MOONFLOWER - 700 | MOON-700-S

DESCRIPTION

A chandelier design based on the form of the Moonflower. Made from lasercut stainless steel frames, chrome plated or lacqured, solid brass components and ballchain in several optional finishes. Illuminated by suspended cluster arrangement of 5 pyrex glass balls containing G9-Halogen lamps.

PRODUCT SIZE

SHADE SIZE: 700W X 580H MM / TOTAL HEIGHT: 950MM

PACKAGING DIMENSIONS

810MM(W) X 810MM(L) X 330MM(H)

LAMP TYPE & NO

5 X G9-HALOGEN 18-40 WATT LAMPS (90-200W) OR
5X G9-2.5W LEDS OR 5X E12/14 OR E26/27 LEDS

CLASS II
IP RATING 54
QC RATING 21

VOLTAGE RANGE
110 - 240V

PRODUCT MARKS & RATINGS

WEIGHT 6KG
PACKED WEIGHT 16KG

TECHNICAL DRAWING

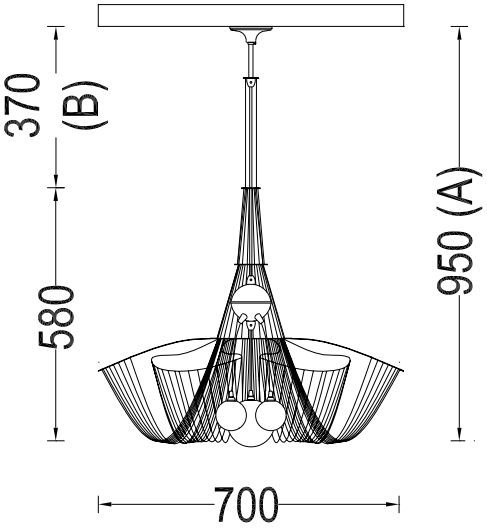

INTERACT

SELECT COLOUR

- SILVER *
- BRASS *
- COPPER *
- SMOKE *
- MIXED METALIC *
- RUST *
- WHITE
- RED
- BLACK

* METALLIC

CUSTOMISE DIMENSIONS

A
B

LAMP TYPE

QUANTITY

ADDITIONAL COMMENTS

WEB LINK DOWNLOAD

MOONFLOWER CHANDELIERS | MOONFLOWER - 500 | MOON-500-S

DESCRIPTION

A chandelier design based on the form of the Moonflower. Made from lasercut stainless steel frames, chrome plated or lacqured, solid brass components and ballchain in several optional finishes. Illuminated by a pyrex glass ball containing a G9-Halogen lamp.

PRODUCT SIZE

SHADE SIZE: 500W X 450H MM / TOTAL HEIGHT: 800MM

PACKAGING DIMENSIONS

610MM(W) X 610MM(L) X 330MM(H)

LAMP TYPE & NO

1 X G9-HALOGEN 33-60 WATT LAMPS (33-60W) OR
1X G9-2.5W LEDS OR E12/14 OR E26/27 LED

CLASS II
IP RATING 54
QC RATING 21

VOLTAGE RANGE
110 - 240V

PRODUCT MARKS & RATINGS

WEIGHT 3KG
PACKED WEIGHT 7KG

TECHNICAL DRAWING

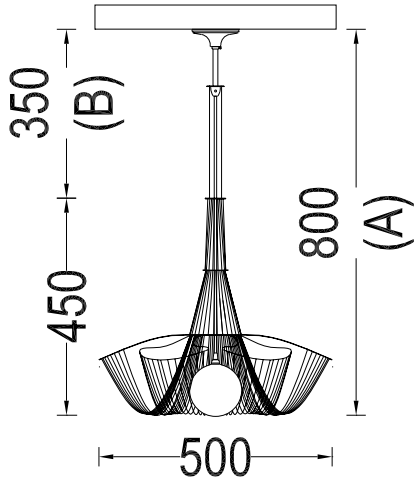

INTERACT

SELECT COLOUR

- SILVER *
- BRASS *
- COPPER *
- SMOKE *
- MIXED METALIC *
- RUST *
- WHITE
- RED
- BLACK

* METALLIC

CUSTOMISE DIMENSIONS

A
B

LAMP TYPE

QUANTITY

ADDITIONAL COMMENTS

WEB LINK DOWNLOAD

ROSE CHANDELIER

ROSE CHANDELIER

DESCRIPTION

A HI-TECH PLATE CHANDELIER WITH CHAIN CURTAINS AS 'PETALS' ARRANGED IN A LAYERED FORMATION IN THE SHAPE OF A ROSE. IT CAN BE ORDERED IN TWO STYLES: STRAIGHT OR LOOPED. IT IS AVAILABLE AS BOTH A CEILING MOUNTED OR SUSPENDED MODEL. CURRENTLY AVAILABLE IN G4-HALOGEN ONLY. A VERSION WITH INBUILT RECESSED LED LAMPS IS CURRENTLY IN DEVELOPMENT.

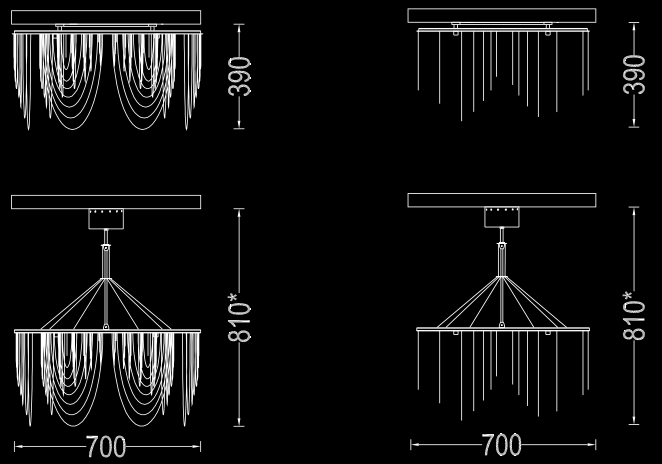

MODEL	SHADE SIZE	TOTAL HEIGHT	
ROSE - 700 - SUSPENDED - LOOPED	700W X 360H MM	810MM	
ROSE-700 - SUSPENDED - STRAIGHT	700W X 360H MM	810MM	
ROSE-700 - CEILING MOUNTED - LOOPED	700W X 370H MM	390MM	
ROSE - 700 - CEILING MOUNTED - STRAIGHT	700W X 370H MM	390MM	

ROSE CHANDELIERS | ROSE - 700 - SUSPENDED - LOOPED | ROSE-700-LOOP-S

DESCRIPTION

A suspended Hi-Tech plate chandelier with chain curtains as \'petals\' arranged in a layered formation in the shape of a Rose. Made from lasercut stainless steel frames, chrome plated or lacqured, solid brass components and ballchain in several optional finishes. Available in two optional styles \'straight\' or \'looped\'. Available in G4-Halogen or LED

PRODUCT SIZE

SHADE SIZE: 700W X 360H MM / TOTAL HEIGHT: 810MM

PACKAGING DIMENSIONS

810MM(W) X 810MM(L) X 330MM(H)

LAMP TYPE & NO

19 X G4-HALOGEN 12V 10 WATT LAMPS (190W) OR
19X G4-2W LEDS

CLASS III
IP RATING 52
QC RATING 32

VOLTAGE RANGE
12V

PRODUCT MARKS & RATINGS

WEIGHT 12KG

PACKED WEIGHT 21KG

TECHNICAL DRAWING

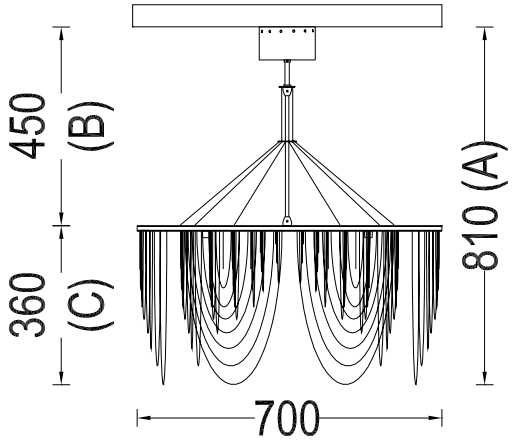

INTERACT

SELECT COLOUR

- SILVER *
- BRASS *
- COPPER *
- SMOKE *
- MIXED METALIC *
- RUST *
- WHITE
- RED
- BLACK

* METALLIC

CUSTOMISE DIMENSIONS

A
B
C

LAMP TYPE

QUANTITY

ADDITIONAL COMMENTS

WEB LINK DOWNLOAD

INDEX

ROSE CHANDELIERS | ROSE-700 - SUSPENDED - STRAIGHT | ROSE-700-STR-S

DESCRIPTION

A suspended Hi-Tech plate chandelier with chain curtains as \'petals\' arranged in a layered formation in the shape of a Rose. Made from lasercut stainless steel frames, chrome plated or lacqured, solid brass components and ballchain in several optional finishes. Available in two optional styles \'straight\' or \'looped\'. Available in G4-Halogen or LED

PRODUCT SIZE

SHADE SIZE: 700W X 360H MM / TOTAL HEIGHT: 810MM

PACKAGING DIMENSIONS

810MM(W) X 810MM(L) X 330MM(H)

LAMP TYPE & NO

19 X G4-HALOGEN 12V 10 WATT LAMPS (190W) OR
19X G4-2W LEDS

CLASS III
IP RATING 52
QC RATING 32

VOLTAGE RANGE
12V

PRODUCT MARKS & RATINGS

WEIGHT 12KG

PACKED WEIGHT 21KG

TECHNICAL DRAWING

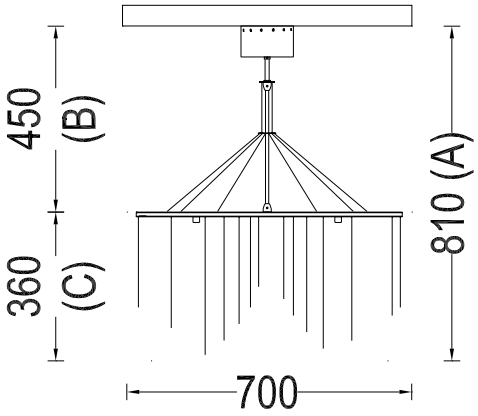

INTERACT

SELECT COLOUR

- SILVER *
- BRASS *
- COPPER *
- SMOKE *
- MIXED METALIC *
- RUST *
- WHITE
- RED
- BLACK

* METALLIC

CUSTOMISE DIMENSIONS

A
B
C

LAMP TYPE

QUANTITY

ADDITIONAL COMMENTS

WEB LINK **DOWNLOAD**

ROSE CHANDELIERS | ROSE-700 - CEILING MOUNTED - LOOPED | ROSE-700-LOOP-C

DESCRIPTION

A suspended Hi-Tech plate chandelier with chain curtains as `petals` arranged in a layered formation in the shape of a Rose. Made from lasercut stainless steel frames, chrome plated or lacqured, solid brass components and ballchain in several optional finishes. Available in two optional styles `straight` or `looped`. Available in G4-Halogen or LED

PRODUCT SIZE

SHADE SIZE: 700W X 370H MM / TOTAL HEIGHT: 390MM

PACKAGING DIMENSIONS

810MM(W) X 810MM(L) X 330MM(H)

LAMP TYPE & NO

19 X G4-HALOGEN 12V 10 WATT LAMPS (190W) OR
19X G4-2W LEDS

CLASS III
IP RATING 52
QC RATING 32

VOLTAGE RANGE
12V

PRODUCT MARKS & RATINGS

WEIGHT 13KG

PACKED WEIGHT 22KG

TECHNICAL DRAWING

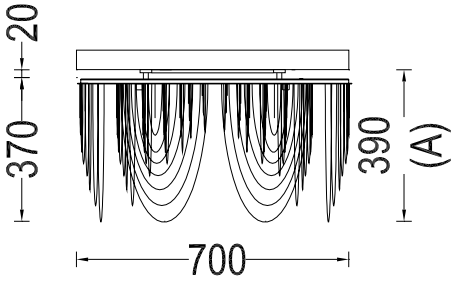

INTERACT

SELECT COLOUR

- SILVER *
- BRASS *
- COPPER *
- SMOKE *
- **MIXED METALIC ***
- RUST *
- WHITE
- RED
- BLACK

* METALLIC

CUSTOMISE DIMENSIONS

A

LAMP TYPE

QUANTITY

ADDITIONAL COMMENTS

WEB LINK **DOWNLOAD**

INDEX

ROSE CHANDELIERS | ROSE - 700 - CEILING MOUNTED - STRAIGHT | ROSE-700-STR-C

DESCRIPTION

A ceiling mounted Hi-Tech plate chandelier with chain curtains as `petals` arranged in a layered formation in the shape of a Rose. Made from lasercut stainless steel frames, chrome plated or lacqured, solid brass components and ballchain in several optional finishes. Available in two optional styles `straight` or `looped`. Available in G4-Halogen or LED

PRODUCT SIZE

SHADE SIZE: 700W X 370H MM / TOTAL HEIGHT: 390MM

PACKAGING DIMENSIONS

810MM(W) X 810MM(L) X 330MM(H)

LAMP TYPE & NO

19 X G4-HALOGEN 12V 10 WATT LAMPS (190W) OR
19X G4-2W LEDS

CLASS III
IP RATING 52
QC RATING 32

VOLTAGE RANGE
12V

PRODUCT MARKS & RATINGS

WEIGHT 13KG
PACKED WEIGHT 22KG

TECHNICAL DRAWING

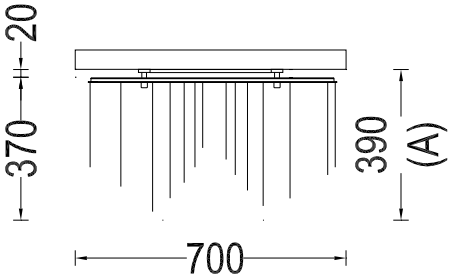

INTERACT

SELECT COLOUR

- SILVER *
- BRASS *
- COPPER *
- SMOKE *
- MIXED METALIC *
- RUST *
- WHITE
- RED
- BLACK

* METALLIC

CUSTOMISE DIMENSIONS

A

LAMP TYPE

QUANTITY

ADDITIONAL COMMENTS

WEB LINK DOWNLOAD

INDEX

NGOMA DRUM

NGOMA DRUM CHANDELIER

DESCRIPTION

A CYLINDRICAL DRUM-SHAPED CHANDELIER WITH A SUPPORT FRAME INSPIRED BY VENETIAN WROUGHT IRON DESIGN. ILLUMINATED BY A SUSPENDED ARRANGEMENT OF PYREX GLASS BALLS CONTAINING G4-HALOGEN LAMPS. AVAILABLE IN TWO SIZES.

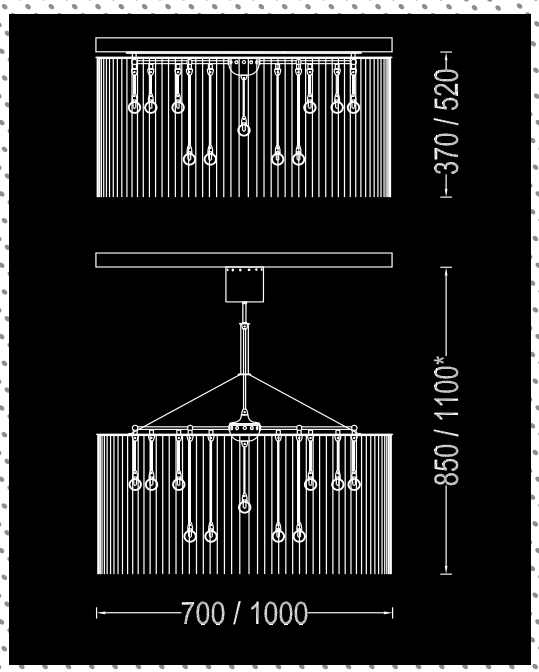

MODEL	SHADE SIZE	TOTAL HEIGHT
NGOMA DRUM - 1000 - SUSPENDED	1000W X 500H MM	1100MM
NGOMA DRUM - 700 - SUSPENDED	700W X 350H MM	850MM
NGOMA DRUM - 1000 - CEILING MOUNTED	1000W X 500H MM	520MM
NGOMA DRUM - 700 - CEILING MOUNT	700W X 350H MM	370MM

NGOMA DRUM | NGOMA DRUM - 1000 - SUSPENDED | NGOMA-1000-S

DESCRIPTION

A circular drum shaped chandelier inspired by Venetian wrought ironwork. Made from lasercut stainless steel frames, chrome plated or lacqured, solid brass components and ballchain in several optional finishes. Illuminated by a suspended arrangement of 19 pyrex glass balls containing G4-Halogen lamps.

PRODUCT SIZE

SHADE SIZE: 1000W X 500H MM / TOTAL HEIGHT: 1100MM

PACKAGING DIMENSIONS

1140MM(W) X 1140MM(L) X 390MM(H)

LAMP TYPE & NO

19 X G4-HALOGEN 10 WATT LAMPS (190W) OR 19X G4-2W LEDS. OR 19X E12/14 // E26/27 LEDS

CLASS III
IP RATING 52
QC RATING 21

VOLTAGE RANGE
12V

PRODUCT MARKS & RATINGS

WEIGHT 17KG
PACKED WEIGHT 32KG

TECHNICAL DRAWING

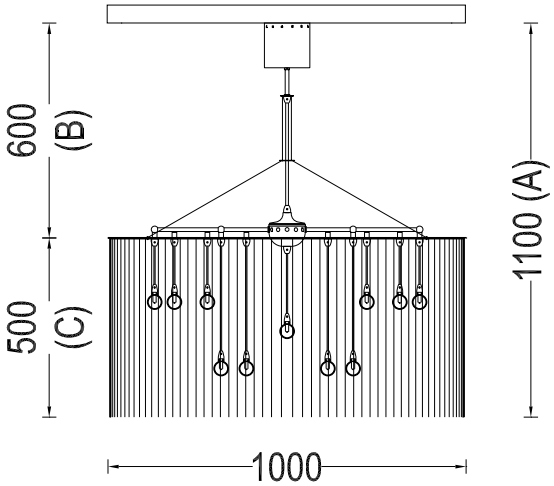

INTERACT

SELECT COLOUR

- SILVER *
- BRASS *
- COPPER *
- SMOKE *
- MIXED METALIC *
- RUST *
- WHITE
- RED
- BLACK

* METALLIC

CUSTOMISE DIMENSIONS

A
B
C

LAMP TYPE

QUANTITY

ADDITIONAL COMMENTS

WEB LINK DOWNLOAD

INDEX

NGOMA DRUM | NGOMA DRUM - 700 - SUSPENDED | NGOMA-700-S

DESCRIPTION

A circular drum shaped chandelier inspired by Venetian wrought ironwork. Made from lasercut stainless steel frames, chrome plated or lacqured, solid brass components and ballchain in several optional finishes. Illuminated by a suspended arrangement of 13 pyrex glass balls containing G4-Halogen lamps.

PRODUCT SIZE

SHADE SIZE: 700W X 350H MM / TOTAL HEIGHT: 850MM

PACKAGING DIMENSIONS

810MM(W) X 810MM(L) X 330MM(H)

LAMP TYPE & NO

13 X G4-HALOGEN 10 WATT LAMPS (130W) OR 13X G4-2W LEDS. OR 13X E12/14 // E26/27 LEDS

CLASS III
IP RATING 52
QC RATING 21

VOLTAGE RANGE
12V

PRODUCT MARKS & RATINGS CE

WEIGHT 9KG

PACKED WEIGHT 17KG

TECHNICAL DRAWING

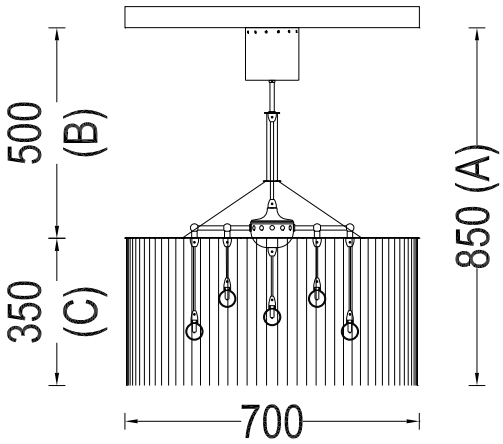

INTERACT

SELECT COLOUR

- SILVER *
- BRASS *
- COPPER *
- SMOKE *
- MIXED METALIC *
- RUST *
- WHITE
- RED
- BLACK

* METALLIC

CUSTOMISE DIMENSIONS

A
B
C

LAMP TYPE

QUANTITY

ADDITIONAL COMMENTS

WEB LINK **DOWNLOAD**

INDEX

NGOMA DRUM | NGOMA DRUM - 1000 - CEILING MOUNTED | NGOMA-1000-C

DESCRIPTION

A ceiling mounted circular drum shaped chandelier inspired by Venetian wrought ironwork. Made from lasercut stainless steel frames, chrome plated or lacqured, solid brass components and ballchain in several optional finishes. Illuminated by a suspended arrangement of 19 pyrex glass balls containing G4-Halogen lamps.

PRODUCT SIZE

SHADE SIZE: 1000W X 500H MM / TOTAL HEIGHT: 520MM

PACKAGING DIMENSIONS

1140MM(W) X 1140MM(L) X 390MM(H)

LAMP TYPE & NO

19 X G4-HALOGEN 10 WATT LAMPS (190W) OR 19X G4-2W LEDS. OR 19X E12/14 // E26/27 LEDS

CLASS III
IP RATING 52
QC RATING 21

VOLTAGE RANGE
12V

PRODUCT MARKS & RATINGS

WEIGHT 17KG
PACKED WEIGHT 32KG

TECHNICAL DRAWING

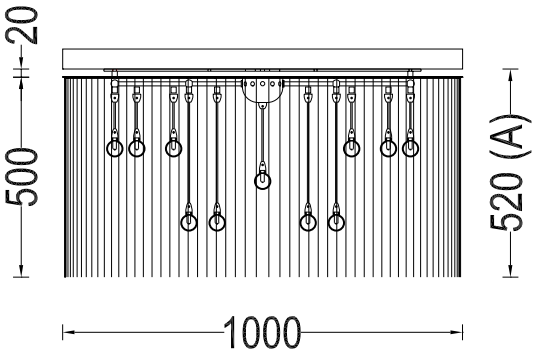

INTERACT

SELECT COLOUR

- SILVER *
- BRASS *
- COPPER *
- SMOKE *
- MIXED METALIC *
- RUST *
- WHITE
- RED
- BLACK

* METALLIC

CUSTOMISE DIMENSIONS

A

LAMP TYPE

QUANTITY

ADDITIONAL COMMENTS

WEB LINK DOWNLOAD

INDEX

NGOMA DRUM | NGOMA DRUM - 700 - CEILING MOUNT | NGOMA-700-C

DESCRIPTION

A ceiling mounted circular drum shaped chandelier inspired by Venetian wrought ironwork. Made from lasercut stainless steel frames, chrome plated or lacqured, solid brass components and ballchain in several optional finishes. Illuminated by a suspended arrangement of 13 pyrex glass balls containing G4-Halogen lamps.

PRODUCT SIZE

SHADE SIZE: 700W X 350H MM / TOTAL HEIGHT: 370MM

PACKAGING DIMENSIONS

810MM(W) X 810MM(L) X 330MM(H)

LAMP TYPE & NO

13 X G4-HALOGEN 10 WATT LAMPS (130W) OR 13X G4-2W LEDS OR 13X E12/14 // E26/27 LEDS

CLASS III
IP RATING 52
QC RATING 21

VOLTAGE RANGE
12V

PRODUCT MARKS & RATINGS

WEIGHT 9KG
PACKED WEIGHT 17KG

TECHNICAL DRAWING

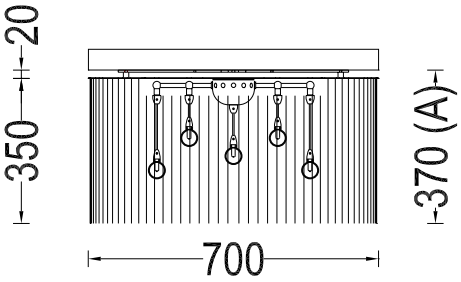

INTERACT

SELECT COLOUR

- SILVER *
- BRASS *
- COPPER *
- SMOKE *
- MIXED METALIC *
- RUST *
- WHITE
- RED
- BLACK

* METALLIC

CUSTOMISE DIMENSIONS

A

LAMP TYPE

QUANTITY

ADDITIONAL COMMENTS

WEB LINK DOWNLOAD

INDEX

THREE-TIERED CHANDELIER

THREE-TIERED CHANDELIER & WALL SCONCE

DESCRIPTION

OUR INTERPRETATION OF THIS CLASSIC MODERN CHANDELIER DESIGN. AN ARRANGEMENT OF THREE SEMI-TRANSPARENT CYLINDRICAL VOLUMES. ILLUMINATED BY G9-HALOGEN 25 WATT LAMPS. THIS DESIGN HAS BEEN COVERED BY A ETL RATING FOR THE USA AND CANADA. IT IS AVAILABLE AS BOTH A CEILING-MOUNTED OR SUSPENDED MODEL, IN THREE SIZES.

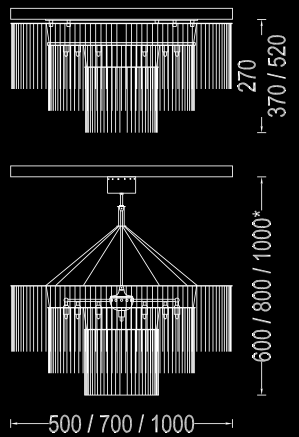

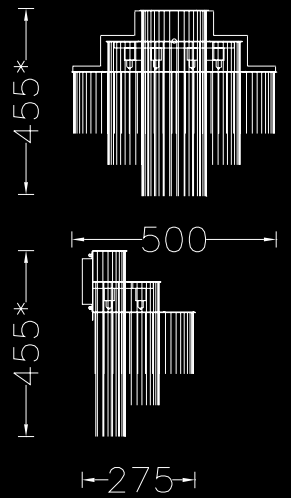

MODEL	SHADE SIZE	TOTAL HEIGHT	
3-TIER - 1000 - SUSPENDED	1000W X 500H MM	1000MM	
3-TIER - 700 - SUSPENDED	700W X 350H MM	800MM	
3-TIER - 500 - SUSPENDED	500W X 250H MM	600MM	
3-TIER - 1000 - CEILING MOUNTED	1000W X 500H MM	520MM	
3-TIER - 700 - CEILING MOUNTED	700W X 350H MM	370MM	
3-TIER - 500 - CEILING MOUNTED	500W X 250H MM	270MM	
3-TIER - 500 - WALL SCONCE	500 X 275W MM	455MM	

THREE-TIERED CHANDELEIRS | 3-TIER - 1000 - SUSPENDED | 3-TIER-1000-S

DESCRIPTION

A suspended chandelier based on a modern classic chandelier design, an arrangement of three semi-transparent cylindrical volumes. Made from lasercut stainless steel frames, chrome plated or lacqured, solid brass components and ballchain in several optional finishes. Illuminated by 19 surface mounted G9 Halogen lamps.

PRODUCT SIZE

SHADE SIZE: 1000W X 500H MM / TOTAL HEIGHT: 1000MM

PACKAGING DIMENSIONS

1140MM(W) X 1140MM(L) X 390MM(H)

LAMP TYPE & NO

13 X G9-HALOGEN 18-40 WATT LAMPS (234-520W)
OR 13X G9-2.5W LEDS

CLASS I
IP RATING 20
QC RATING 21

VOLTAGE RANGE
110 - 240V

PRODUCT MARKS & RATINGS

WEIGHT 16KG

PACKED WEIGHT 31KG

TECHNICAL DRAWING

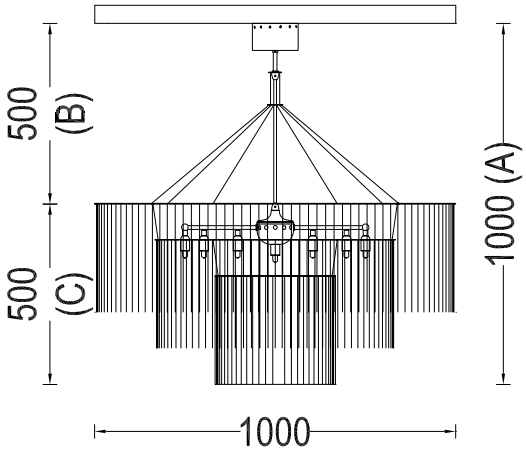

INTERACT

SELECT COLOUR

- SILVER *
- BRASS *
- COPPER *
- SMOKE *
- MIXED METALIC *
- RUST *
- WHITE
- RED
- BLACK

* METALLIC

CUSTOMISE DIMENSIONS

A
B
C

LAMP TYPE

QUANTITY

ADDITIONAL COMMENTS

WEB LINK DOWNLOAD

INDEX
123

THREE-TIERED CHANDELEIRS | 3-TIER - 700 - SUSPENDED | 3-TIER-700-S

DESCRIPTION

A suspended chandelier based on a modern classic chandelier design, an arrangement of three semi-transparent cylindrical volumes. Made from lasercut stainless steel frames, chrome plated or lacqured, solid brass components and ballchain in several optional finishes. Illuminated by 13 surface mounted G9 Halogen lamps.

PRODUCT SIZE

SHADE SIZE: 700W X 350H MM / TOTAL HEIGHT: 800MM

PACKAGING DIMENSIONS

810MM(W) X 810MM(L) X 330MM(H)

LAMP TYPE & NO

13 X G9-HALOGEN 18-40 WATT LAMPS (234-520W)
OR 13X G9-2.5W LEDS

CLASS I
IP RATING 20
QC RATING 21

VOLTAGE RANGE
110 - 240V

PRODUCT MARKS & RATINGS

WEIGHT 10KG

PACKED WEIGHT 16KG

TECHNICAL DRAWING

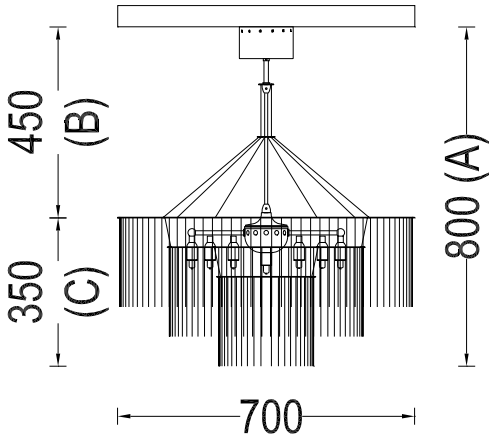

INTERACT

SELECT COLOUR

- SILVER *
- BRASS *
- COPPER *
- SMOKE *
- MIXED METALIC *
- RUST *
- WHITE
- RED
- BLACK

* METALLIC

CUSTOMISE DIMENSIONS

A
B
C

LAMP TYPE

QUANTITY

ADDITIONAL COMMENTS

WEB LINK DOWNLOAD

INDEX

THREE-TIERED CHANDELEIRS | 3-TIER - 500 - SUSPENDED | 3-TIER-500-S

DESCRIPTION

A suspended chandelier based on a modern classic chandelier design, an arrangement of three semi-transparent cylindrical volumes. Made from lasercut stainless steel frames, chrome plated or lacquered, solid brass components and ballchain in several optional finishes. Illuminated by 7 surface mounted G9 Halogen lamps.

PRODUCT SIZE

SHADE SIZE: 500W X 250H MM / TOTAL HEIGHT: 600MM

PACKAGING DIMENSIONS

610MM(W) X 610MM(L) X 330MM(H)

LAMP TYPE & NO

7 X G9-HALOGEN 18-40 WATT LAMPS (126-280W) OR
7X G9-2.5W LEDS

CLASS I
IP RATING 20
QC RATING 21

VOLTAGE RANGE
110 - 240V

PRODUCT MARKS & RATINGS

WEIGHT 6KG

PACKED WEIGHT 10KG

TECHNICAL DRAWING

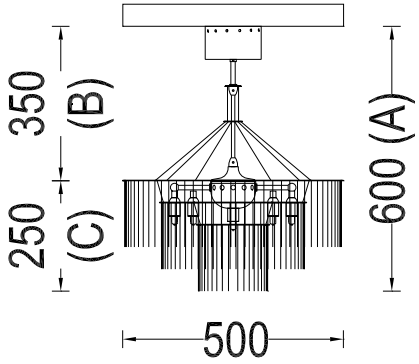

INTERACT

SELECT COLOUR

- SILVER *
- BRASS *
- COPPER *
- SMOKE *
- MIXED METALIC *
- RUST *
- WHITE
- RED
- BLACK

* METALLIC

CUSTOMISE DIMENSIONS

A
B
C

LAMP TYPE

QUANTITY

ADDITIONAL COMMENTS

WEB LINK DOWNLOAD

THREE-TIERED CHANDELEIRS | 3-TIER - 1000 - CEILING MOUNTED | 3-TIER-1000-C

DESCRIPTION

A ceiling mounted chandelier based on a modern classic chandelier design, an arrangement of three semi-transparent cylindrical volumes. Made from lasercut stainless steel frames, chrome plated or lacqured, solid brass components and ballchain in several optional finishes. Illuminated by 19 surface mounted G9 Halogen lamps.

PRODUCT SIZE

SHADE SIZE: 1000W X 500H MM / TOTAL HEIGHT: 520MM

PACKAGING DIMENSIONS

1140MM(W) X 1140MM(L) X 390MM(H)

LAMP TYPE & NO

13 X G9-HALOGEN 18-40 WATT LAMPS (234-520W)
OR 13X G9-2.5W LEDS

CLASS I
IP RATING 20
QC RATING 21

VOLTAGE RANGE
110 - 240V

PRODUCT MARKS & RATINGS

WEIGHT 23KG
PACKED WEIGHT 37KG

TECHNICAL DRAWING

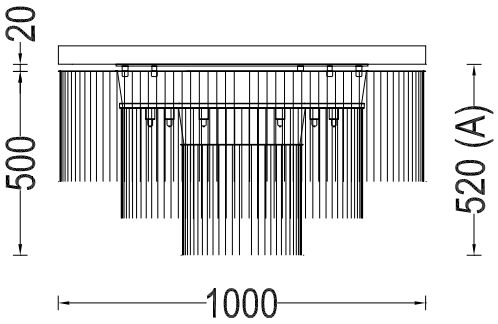

INTERACT

SELECT COLOUR

- SILVER *
- BRASS *
- COPPER *
- SMOKE *
- MIXED METALIC *
- RUST *
- WHITE
- RED
- BLACK

* METALLIC

CUSTOMISE DIMENSIONS

A

LAMP TYPE

QUANTITY

ADDITIONAL COMMENTS

WEB LINK DOWNLOAD

THREE-TIERED CHANDELEIRS | 3-TIER - 700 - CEILING MOUNTED | 3-TIER-700-C

DESCRIPTION

A ceiling mounted chandelier based on a modern classic chandelier design, an arrangement of three semi-transparent cylindrical volumes. Made from lasercut stainless steel frames, chrome plated or lacqured, solid brass components and ballchain in several optional finishes. Illuminated by 13 surface mounted G9 Halogen lamps.

PRODUCT SIZE

SHADE SIZE: 700W X 350H MM / TOTAL HEIGHT: 370MM

PACKAGING DIMENSIONS

810MM(W) X 810MM(L) X 330MM(H)

LAMP TYPE & NO

13 X G9-HALOGEN 18-40 WATT LAMPS (234-520W)
OR 13X G9-2.5W LEDS

CLASS I
IP RATING 20
QC RATING 21

VOLTAGE RANGE
110 - 240V

PRODUCT MARKS & RATINGS

WEIGHT 12KG
PACKED WEIGHT 18KG

TECHNICAL DRAWING

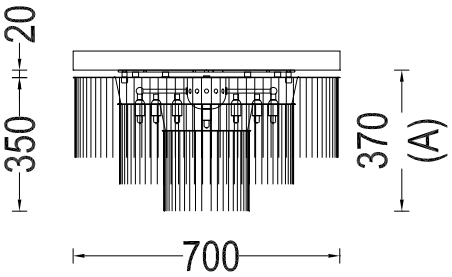

INTERACT

SELECT COLOUR

- SILVER *
- BRASS *
- COPPER *
- SMOKE *
- MIXED METALIC *
- RUST *
- WHITE
- RED
- BLACK

* METALLIC

CUSTOMISE DIMENSIONS

A

LAMP TYPE

QUANTITY

ADDITIONAL COMMENTS

WEB LINK DOWNLOAD

THREE-TIERED CHANDELEIRS | 3-TIER - 500 - CEILING MOUNTED | 3-TIER-500-C

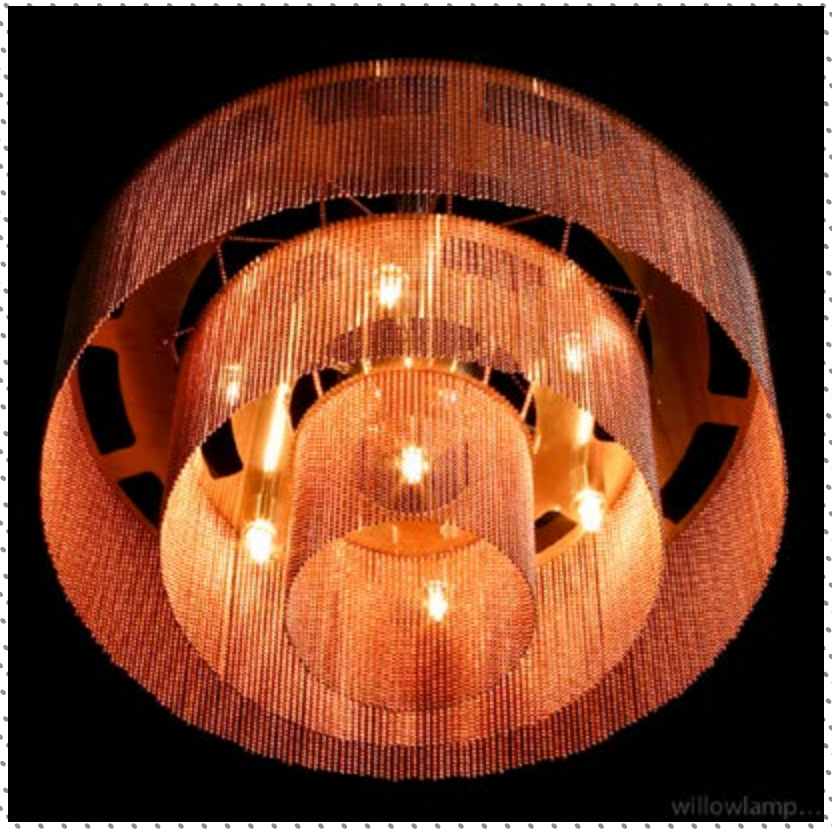

DESCRIPTION

A ceiling mounted chandelier based on a modern classic chandelier design, an arrangement of three semi-transparent cylindrical volumes. Made from lasercut stainless steel frames, chrome plated or lacqured, solid brass components and ballchain in several optional finishes. Illuminated by 7 surface mounted G9 Halogen lamps.

PRODUCT SIZE

SHADE SIZE: 500W X 250H MM / TOTAL HEIGHT: 270MM

PACKAGING DIMENSIONS

610MM(W) X 610MM(L) X 330MM(H)

LAMP TYPE & NO

7 X G9-HALOGEN 18-40 WATT LAMPS (126-280W) OR LED

CLASS I
IP RATING 20
QC RATING 21

VOLTAGE RANGE
110 - 240V

PRODUCT MARKS & RATINGS

WEIGHT 7KG
PACKED WEIGHT 11KG

TECHNICAL DRAWING

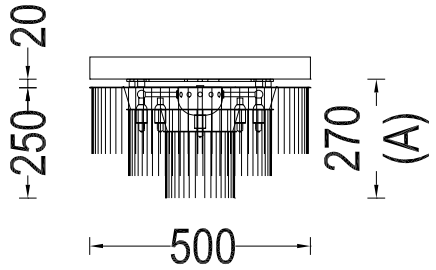

INTERACT

SELECT COLOUR

- SILVER *
- BRASS *
- COPPER *
- SMOKE *
- MIXED METALIC *
- RUST *
- WHITE
- RED
- BLACK

* METALLIC

CUSTOMISE DIMENSIONS

A

LAMP TYPE

QUANTITY

ADDITIONAL COMMENTS

WEB LINK DOWNLOAD

INDEX

3-TIER | 3-TIER - WALL SCONCE - 500 | 3-TIER-500-WS

DESCRIPTION

An extension of the existing 3-Tier chandelier collection now also available as a matching wall sconce. Illuminated by 4x G9-Halogen or G9-LED lamps.

PRODUCT SIZE

SHADE SIZE: 500X275W MM / TOTAL HEIGHT: 455MM

PACKAGING DIMENSIONS

380MM(W) X 600MM(L) X 320MM(H)

LAMP TYPE & NO

4 X G9-HALOGEN 18-40 WATT LAMPS (72-160W) OR
4X G9-2.5W LEDS

CLASS I
IP RATING 20
QC RATING 21

VOLTAGE RANGE
110-240V

PRODUCT MARKS & RATINGS

CE

WEIGHT 5KG

PACKED WEIGHT 7KG

TECHNICAL DRAWING

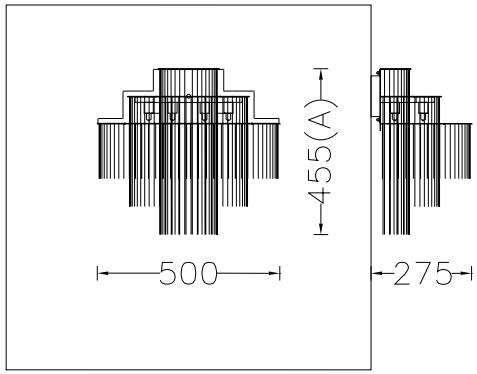

INTERACT

SELECT COLOUR

- SILVER *
- BRASS *
- COPPER *
- SMOKE *
- MIXED METALIC *
- RUST *
- WHITE
- RED
- BLACK

* METALLIC

CUSTOMISE DIMENSIONS

A
B

LAMP TYPE

QUANTITY

ADDITIONAL COMMENTS

WEB LINK DOWNLOAD

INDEX

ELLIPTICAL THREE-TIERED CHANDELIER

ELLIPTICAL THREE-TIERED CHANDELIER

DESCRIPTION

A SUSPENDED OR CEILING-MOUNTED CHANDELIER BASED ON A MODERN CLASSIC CHANDELIER DESIGN WITH AN ARRANGEMENT OF THREE SEMI-TRANSPARENT ELLIPTICAL VOLUMES. MADE FROM LASER CUT STAINLESS STEEL FRAMES, CHROME PLATED OR LACQUERED, SOLID BRASS COMPONENTS AND BALLCHAIN IN SEVERAL OPTIONAL FINISHES. ILLUMINATED BY 12 SURFACE MOUNTED G9 HALOGEN OR LED LAMPS.

MODEL	SHADE SIZE	TOTAL HEIGHT
ELLIPTICAL 3 TIER - 1600X600 - SUSPENDED	1600X600W X 500H MM	1000MM
ELLIPTICAL 3 TIER - 1600X600 - CEILING MOUNTED	1600X600W X 500H MM	520MM

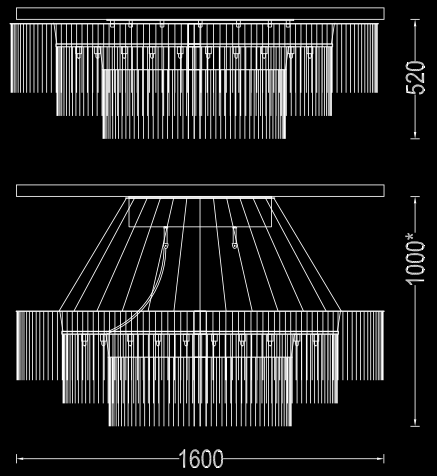

ELLIPTICAL 3 TIER | ELLIPTICAL 3 TIER - 1600X600 - CEILING MOUNTED | ELLI-3T-1600-C

DESCRIPTION

A ceiling mounted chandelier based on a modern classic chandelier design, an arrangement of three semi-transparent elliptical volumes. Made from lasercut stainless steel frames, chrome plated or lacqured, solid brass components and ballchain in several optional finishes. Illuminated by 18 surface mounted G9 Halogen or LED lamps.

PRODUCT SIZE

SHADE SIZE: 1600X600W X 500H MM / TOTAL HEIGHT: 520MM

PACKAGING DIMENSIONS

1760MM(W) X 800MM(L) X 390MM(H)

LAMP TYPE & NO

18 X G9-HALOGEN 18-40 WATT LAMPS (324-720W)
OR 18X G9-2.5W LEDS

CLASS I
IP RATING 20
QC RATING 21

VOLTAGE RANGE
110 - 240V

PRODUCT MARKS & RATINGS

WEIGHT 28KG
PACKED WEIGHT 50KG

TECHNICAL DRAWING

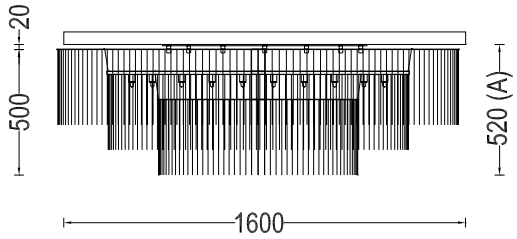

INTERACT

SELECT COLOUR

- SILVER *
- BRASS *
- COPPER *
- SMOKE *
- MIXED METALIC *
- RUST *
- WHITE
- RED
- BLACK

* METALLIC

CUSTOMISE DIMENSIONS

A

LAMP TYPE

QUANTITY

ADDITIONAL COMMENTS

WEB LINK DOWNLOAD

INDEX

ELLIPTICAL 3 TIER | ELLIPTICAL 3 TIER - 1600X600 - SUSPENDED | ELLI-3T-1600-S

DESCRIPTION

A suspended chandelier based on a modern classic chandelier design, an arrangement of three semi-transparent elliptical volumes. Made from lasercut stainless steel frames, chrome plated or lacqured, solid brass components and ballchain in several optional finishes. Illuminated by 18 surface mounted G9 Halogen or LED lamps.

PRODUCT SIZE

SHADE SIZE: 1600X600W X 500H MM / TOTAL HEIGHT: 1000MM

PACKAGING DIMENSIONS

1760MM(W) X 800MM(L) X 390MM(H)

LAMP TYPE & NO

18 X G9-HALOGEN 18-40 WATT LAMPS (324-720W)
OR 18X G9-2.5W LEDS

CLASS I
IP RATING 20
QC RATING 21

VOLTAGE RANGE
110 - 240V

PRODUCT MARKS & RATINGS

WEIGHT 25KG
PACKED WEIGHT 37KG

TECHNICAL DRAWING

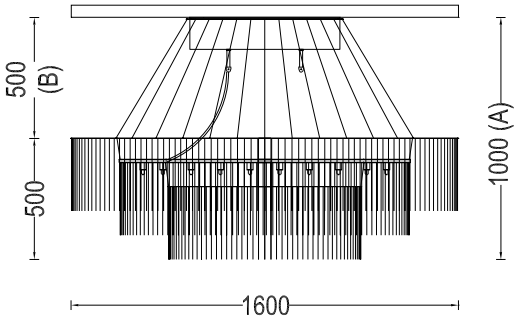

INTERACT

SELECT COLOUR

- SILVER *
- BRASS *
- COPPER *
- SMOKE *
- MIXED METALIC *
- RUST *
- WHITE
- RED
- BLACK

* METALLIC

CUSTOMISE DIMENSIONS

A
B

LAMP TYPE

QUANTITY

ADDITIONAL COMMENTS

WEB LINK DOWNLOAD

INDEX

SIMPLE CLASSICS

PENDANTS AND WALL SCONCES

INDEX
134

SIMPLE CLASSICS

PENDANTS AND WALL SCONCES

In all things of nature there is something of the marvelous. Aristotle

HALFPIPE

2 FOLDED CIRCLES

LOVE CLOVERS

MOROCCAN VASES

A-PEARL

SPIRAL PODS

EXTRA LONG POD

LONG LANTERNS

CROCUS

FRANGIPANI

LANTERN

HALFPIPE

HALFPIPE WALL SCONCE

DESCRIPTION

AN ELEGANT WALL-SCONCE IN THE FORM A PARABOLIC CURVED HALF-PIPE. DECEPTIVELY SIMPLE BUT IN REALITY EVERY PIECE OF CHAIN HAS TO BE CUT TO THE PERFECT LENGTH TO SIMULATE THE EFFECT OF ITS PERFECT YET SIMPLE FLUID FORM.

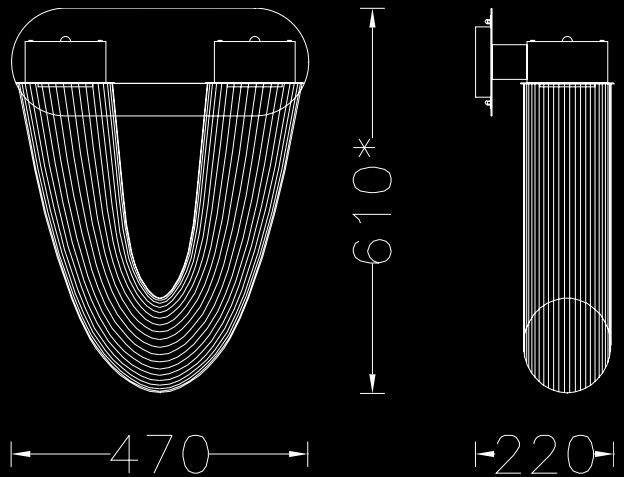

MODEL	SHADE SIZE	TOTAL HEIGHT
HALFPIPE - WALL SCONCE - 150	470 X 220W MM	610MM

HALFPIPE | HALFPIPE - WALL SCONCE - 150 | HALFPIPE-150-WS

DESCRIPTION

An elegant wall-sconce in the form a parabolic curved Half-Pipe. Deceptively simple but in reality every piece of chain has to be cut to the perfect length to simulate the effect of its perfect yet simple fluid form. Illuminated by 2x Gu7-Halogen or Gu7-LED lamps.

PRODUCT SIZE

SHADE SIZE: 470 X 220W MM / TOTAL HEIGHT: 610MM

PACKAGING DIMENSIONS

300MM(W) X 580MM(L) X 340MM(H)

LAMP TYPE & NO

2 X GU.10 50W HALOGEN (100W) OR 2X GU.10 3-5W LED'S

CLASS I
IP RATING 20
QC RATING 21

VOLTAGE RANGE
110-240V

PRODUCT MARKS & RATINGS

WEIGHT 7KG
PACKED WEIGHT 10KG

TECHNICAL DRAWING

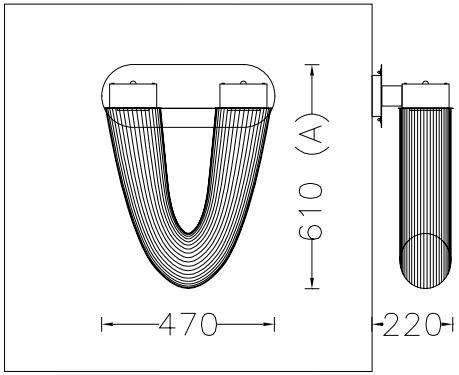

INTERACT

SELECT COLOUR

- SILVER *
- BRASS *
- COPPER *
- SMOKE *
- MIXED METALIC *
- RUST *
- WHITE
- RED
- BLACK

* METALLIC

CUSTOMISE DIMENSIONS

A
B

LAMP TYPE

QUANTITY

ADDITIONAL COMMENTS

WEB LINK DOWNLOAD

2 FOLDED CIRCLES

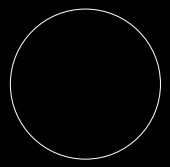

SOLID

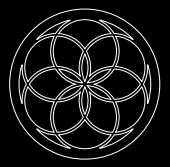

FLOWER OF LIFE

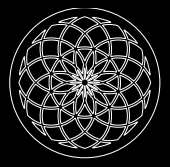

TORUS

FLAME

2 FOLDED CIRCLES

DESCRIPTION

THE A COLLECTION OF WALL LAMPS THAT ARE BASED ENTIRELY ON JUST 2 SIMPLE CIRCLES FOLDED AT 90 DEGREES TO ONE ANOTHER. YET, THE RESULTING FORMS ARE SURPRISINGLY DIVERSE.

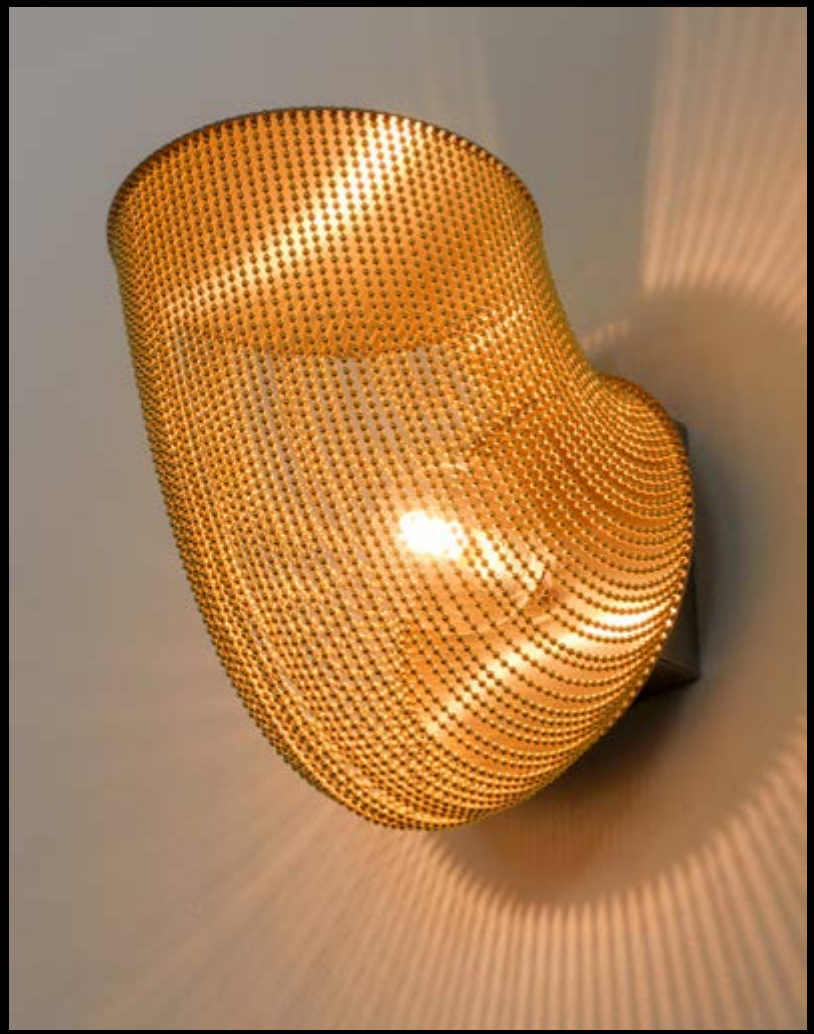

TOP FOLD

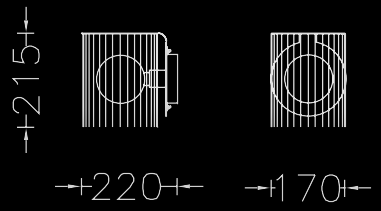

HALF PIPE

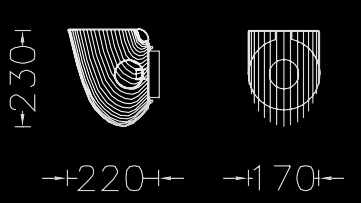

BOTTOM FOLD

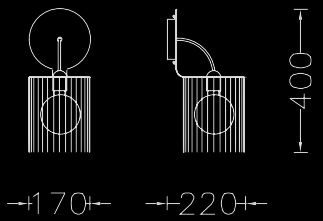

LANGARM

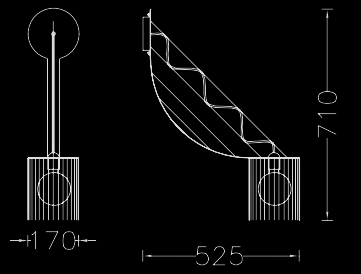

MODEL	SHADE SIZE	TOTAL HEIGHT	
QUARTERPIPE - WALL SCONCE - 170	170 X 220W MM	230MM	
TOPFOLD - WALL SCONCE - 170	170 X 220W MM	215MM	
BOTTOMFOLD - WALL SCONCE - 170	170 X 220W MM	400MM	
LANGARM - WALL SCONCE - 170	170 X 525W MM	710MM	

2 FOLDED CIRCLES | QUARTERPIPE - WALL SCONCE - 170 | QUARTERPIPE-170-WS

DESCRIPTION

A petite wall-sconce in the form a curved Quarter-Pipe. Illuminated by 1x G9 Halogen/LED bulb within handmade clear pyrex glass balls with OR by 1x E27 vintage style LED bulb.

PRODUCT SIZE

SHADE SIZE: 170 X 220W MM / TOTAL HEIGHT: 230MM

PACKAGING DIMENSIONS

310MM(W) X 310MM(L) X 350MM(H)

LAMP TYPE & NO

1 X G9-HALOGEN 18-40 WATT LAMPS (40W) OR 1X G9-2.5W LEDS. OR 1 X E12/14 // E26/27 LED

CLASS II
IP RATING 54
QC RATING 21

VOLTAGE RANGE
110-240V

PRODUCT MARKS & RATINGS CE

WEIGHT 2KG
PACKED WEIGHT 3KG

TECHNICAL DRAWING

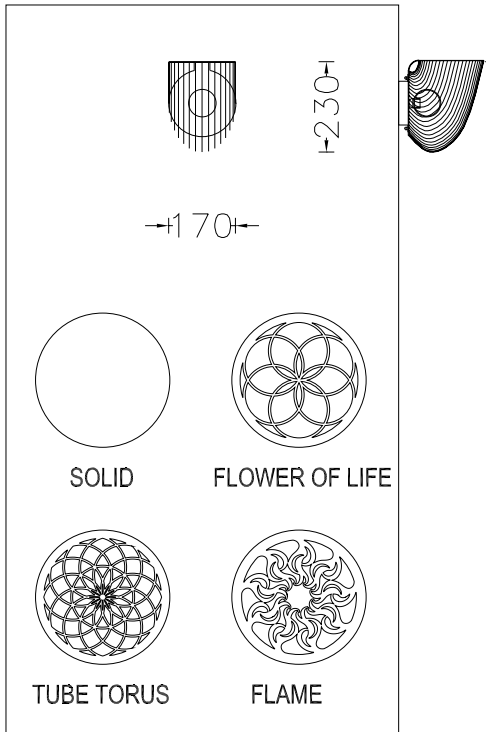

INTERACT

SELECT COLOUR

- SILVER *
- BRASS *
- COPPER *
- SMOKE *
- MIXED METALIC *
- RUST *
- WHITE
- RED
- BLACK

* METALLIC

CUSTOMISE DIMENSIONS

A
B

LAMP TYPE

QUANTITY

ADDITIONAL COMMENTS

WEB LINK DOWNLOAD

2 FOLDED CIRCLES | TOPFOLD - WALL SCONCE - 170 | TOPFOLD-170-WS

DESCRIPTION

This very simple petite wall-sconce based on 2 circles folded at 90 degrees to one another. There are 4 'Frame patterns' options which are designed tocast shadows on the wall above. Illuminated by 1x G9 Halogen/LED bulb within handmade clear or sandblasted pyrex glass ball with OR by 1x E27 vintage style LED bulb.

PRODUCT SIZE

SHADE SIZE: 170 X 220W MM / TOTAL HEIGHT: 215MM

PACKAGING DIMENSIONS

310MM(W) X 310MM(L) X 350MM(H)

LAMP TYPE & NO

1 X G9-HALOGEN 18-40 WATT LAMPS (40W) OR 1X G9-2.5W LEDS. OR 1 X E12/14 // E26/27 LED

CLASS II
IP RATING 54
QC RATING 21

VOLTAGE RANGE
110-240V

PRODUCT MARKS & RATINGS CE

WEIGHT 2KG
PACKED WEIGHT 4KG

TECHNICAL DRAWING

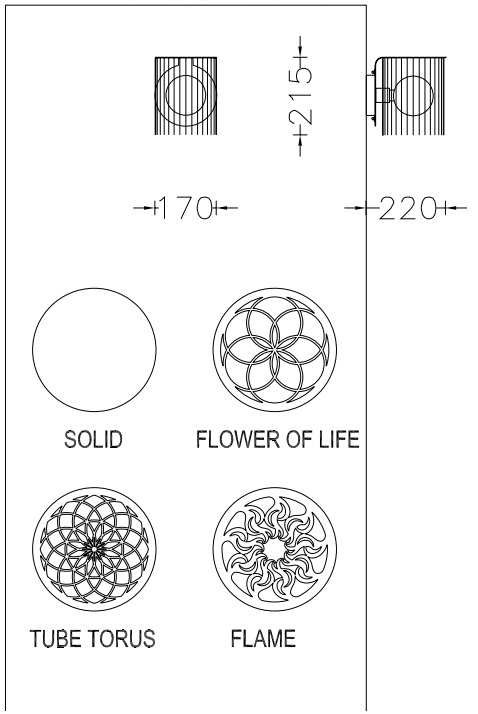

INTERACT

SELECT COLOUR

- SILVER *
- BRASS *
- COPPER *
- SMOKE *
- MIXED METALIC *
- RUST *
- WHITE
- RED
- BLACK

* METALLIC

CUSTOMISE DIMENSIONS

A
B

LAMP TYPE

QUANTITY

ADDITIONAL COMMENTS

WEB LINK **DOWNLOAD**

INDEX

2 FOLDED CIRCLES | BOTTOMFOLD - WALL SCONCE - 170 | BOTTOMFOLD-170-WS

DESCRIPTION

This very simple petite wall-sconce based on 2 circles folded at 90 degrees to one another, with the wall plate above the light. Illuminated by 1x G9 Halogen/LED bulb within handmade clear or sandblasted pyrex glass ball with OR by 1x E27 vintage style LED bulb.

PRODUCT SIZE

SHADE SIZE: 170 X 220W MM / TOTAL HEIGHT: 400MM

PACKAGING DIMENSIONS

310MM(W) X 310MM(L) X 350MM(H)

LAMP TYPE & NO

1 X G9-HALOGEN 18-40 WATT LAMPS (40W) OR 1X G9-2.5W LEDS. OR 1 X E12/14 // E26/27 LED

CLASS II
IP RATING 54
QC RATING 32

VOLTAGE RANGE
110-24-V

PRODUCT MARKS & RATINGS CE

WEIGHT 2KG
PACKED WEIGHT 4KG

TECHNICAL DRAWING

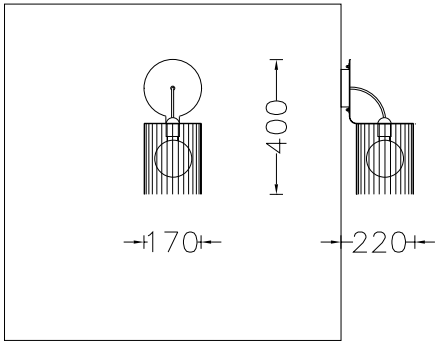

INTERACT

SELECT COLOUR

- SILVER *
- BRASS *
- COPPER *
- SMOKE *
- MIXED METALIC *
- RUST *
- WHITE
- RED
- BLACK

* METALLIC

CUSTOMISE DIMENSIONS

A
B

LAMP TYPE

QUANTITY

ADDITIONAL COMMENTS

WEB LINK DOWNLOAD

INDEX

2 FOLDED CIRCLES | LANGARM - WALL SCONCE - 170 | LANGARM-170-WS

DESCRIPTION

An original new design with a projecting arm reminiscent of a suspension bridge. Illuminated by 1x G9 Halogen/LED bulb within pyrex glass cylindrical diffuser with OR by 1x E26/27 vintage style LED bulb.

PRODUCT SIZE

SHADE SIZE: 170 X 525W MM / TOTAL HEIGHT: 710MM

PACKAGING DIMENSIONS

310MM(W) X 800MM(L) X 340MM(H)

LAMP TYPE & NO

1 X G9-HALOGEN 18-40 WATT LAMPS (40W) OR 1X G9-2.5W LEDS. OR 1 X E12/14 //E26/27 LED

CLASS II
IP RATING 54
QC RATING 21

VOLTAGE RANGE
110-240V

PRODUCT MARKS & RATINGS CE

WEIGHT 3KG
PACKED WEIGHT 5KG

TECHNICAL DRAWING

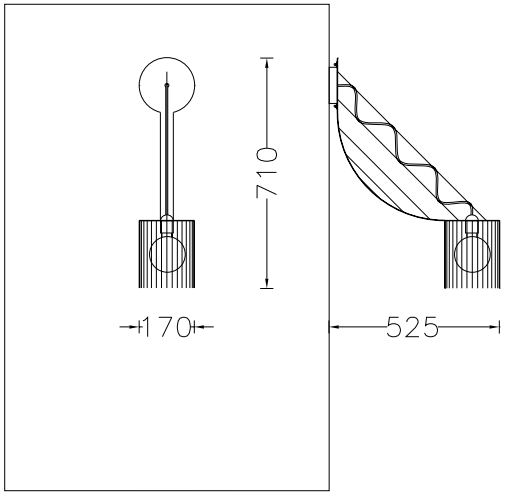

INTERACT

SELECT COLOUR

- SILVER *
- BRASS *
- COPPER *
- SMOKE *
- MIXED METALIC *
- RUST *
- WHITE
- RED
- BLACK

* METALLIC

CUSTOMISE DIMENSIONS

A
B

LAMP TYPE

QUANTITY

ADDITIONAL COMMENTS

WEB LINK DOWNLOAD

INDEX

LOVE CLOVERS

LOVE CLOVERS

DESCRIPTION

A FOUR LEAF CLOVER DESIGN TRANSLATED INTO A VOLUPTUOUS AND SENSUAL HEART SHAPED PENDANT LAMPS. ALSO AVAILABLE AS WALL LANTERNS.

MODEL	SHADE SIZE	TOTAL HEIGHT
BABYLOVE CLOVER- SUSPENDED - 250	250W X 300H MM	630MM
BABYLOVE CLOVER - WALL LANTERN - 250	250W X 300H MM	620MM
LUCKYLOVE CLOVER- SUSPENDED - 250	250W X 350H MM	680MM
SECRETLOVE CLOVER- SUSPENDED - 400	400W X 460H MM	840MM

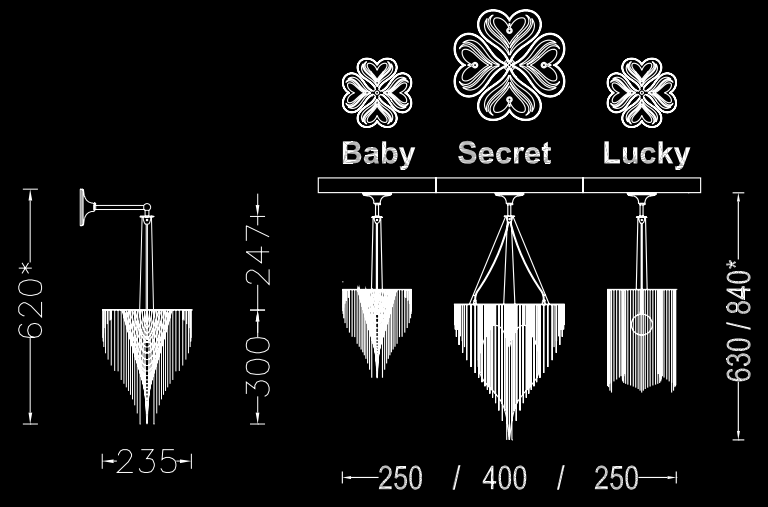

LOVE CLOVERS | BABYLOVE CLOVER- SUSPENDED - 250 | BABYLOVE-250-S

DESCRIPTION

A miniature four leaf clover design translated into a voluptuous and sensual heart shaped form. Illuminated by a single G4 LED 3W lamp within a Pyrex glass ball.

PRODUCT SIZE

SHADE SIZE: 250W X 300H MM / TOTAL HEIGHT: 630MM

PACKAGING DIMENSIONS

460MM(W) X 460MM(L) X 330MM(H)

LAMP TYPE & NO

1X G4-LED 12V 2 WATT LAMPS (2W) LED ONLY

CLASS III
IP RATING 54
QC RATING 231

VOLTAGE RANGE
12V

PRODUCT MARKS & RATINGS

WEIGHT 1.2KG
PACKED WEIGHT 4.2KG

TECHNICAL DRAWING

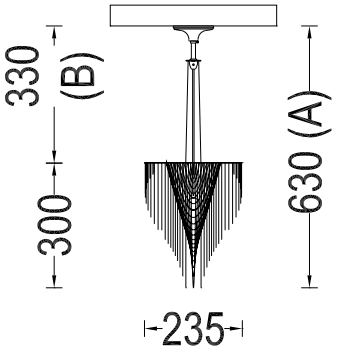

INTERACT

SELECT COLOUR

- SILVER *
- BRASS *
- COPPER *
- SMOKE *
- MIXED METALIC *
- RUST *
- WHITE
- RED
- BLACK

* METALLIC

CUSTOMISE DIMENSIONS

A
B

LAMP TYPE

QUANTITY

ADDITIONAL COMMENTS

WEB LINK DOWNLOAD

LOVE CLOVERS | BABYLOVE CLOVER - 250 - WALL LANTERN | BABYLOVE-250-WL

DESCRIPTION

A four leaf clover design translated into a voluptuous and sensual heart shaped pendant lamps. Now available as a wall sconce as an extension of the existing pendant lamp range. Illuminated by 1x G4-2W LED withing a pyrex glass ball.

PRODUCT SIZE

SHADE SIZE: 250W X 300H MM / TOTAL HEIGHT: 620MM

PACKAGING DIMENSIONS

460MM(W) X 460MM(L) X 330MM(H)

LAMP TYPE & NO

1X G4-LED 12V 2 WATT LAMPS (2W) LED ONLY

CLASS III
IP RATING 54
QC RATING 31

VOLTAGE RANGE
12 V (220V INPUT)

PRODUCT MARKS & RATINGS CE

WEIGHT 1.2KG

PACKED WEIGHT 4.2KG

TECHNICAL DRAWING

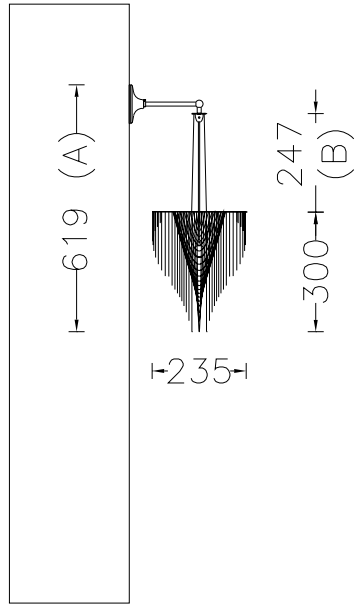

INTERACT

SELECT COLOUR

- SILVER *
- BRASS *
- COPPER *
- SMOKE *
- **MIXED METALIC ***
- RUST *
- WHITE
- RED
- BLACK

* METALLIC

CUSTOMISE DIMENSIONS

A
B

LAMP TYPE

QUANTITY

ADDITIONAL COMMENTS

WEB LINK **DOWNLOAD**

INDEX

LOVE CLOVERS | SECRETLOVE CLOVER- SUSPENDED - 400 | SECRETLOVE-400-S

DESCRIPTION

A four leaf clover design translated into a voluptuous and sensual heart shaped pendant lamps. The chain has been cutaway to reveal heart patterns from an angle. This model is illuminated by 4 G4-LED's.

PRODUCT SIZE

SHADE SIZE: 400W X 460H MM / TOTAL HEIGHT: 840MM

PACKAGING DIMENSIONS

560MM(W) X 560MM(L) X 330MM(H)

LAMP TYPE & NO

4 X G4-LED 12V 2 WATT LAMPS (8W) LED ONLY

CLASS III
IP RATING 54
QC RATING 31

VOLTAGE RANGE
12V

PRODUCT MARKS & RATINGS CE

WEIGHT 4KG

PACKED WEIGHT 8KG

TECHNICAL DRAWING

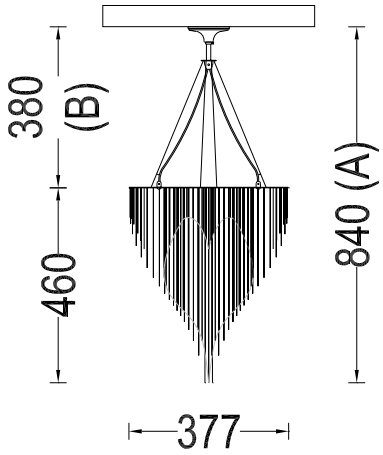

INTERACT

SELECT COLOUR

- SILVER *
- BRASS *
- COPPER *
- SMOKE *
- MIXED METALIC *
- RUST *
- WHITE
- RED
- BLACK

* METALLIC

CUSTOMISE DIMENSIONS

A
B

LAMP TYPE

QUANTITY

ADDITIONAL COMMENTS

WEB LINK DOWNLOAD

LOVE CLOVERS | LUCKYLOVE CLOVER- SUSPENDED - 250 | LUCKYLOVE-250-S

DESCRIPTION

A four leaf clover design translated into a voluptuous and sensual flower shaped pendant lamps. Illuminated by a single G9 Halogen or 3W LED lamp within a Pyrex glass ball.

PRODUCT SIZE

SHADE SIZE: 250W X 350H MM / TOTAL HEIGHT: 680MM

PACKAGING DIMENSIONS

460MM(W) X 460MM(L) X 330MM(H)

LAMP TYPE & NO

1 X G9-HALOGEN 18-40 WATT LAMPS OR 1X G9-2.5W LED

CLASS II
IP RATING 54
QC RATING 21

VOLTAGE RANGE
110 - 240 V

PRODUCT MARKS & RATINGS CE

WEIGHT 1.3KG
PACKED WEIGHT 4.3KG

TECHNICAL DRAWING

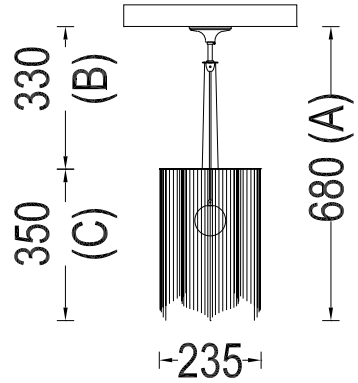

INTERACT

SELECT COLOUR

- SILVER *
- BRASS *
- COPPER *
- SMOKE *
- MIXED METALIC *
- RUST *
- WHITE
- RED
- BLACK

* METALLIC

CUSTOMISE DIMENSIONS

A
B

LAMP TYPE

QUANTITY

ADDITIONAL COMMENTS

WEB LINK DOWNLOAD

MOROCCAN VASES

MOROCCAN VASES

DESCRIPTION

A COLLECTION OF PETITE LAMPS INSPIRED BY THE FORMS AND COLOURS OF MOROCCAN METAL VASES. ALSO AVAILABLE AS WALL LANTERNS.

MODEL	SHADE SIZE	TOTAL HEIGHT
MOROCCAN VASE 1 - SUSPENDED - SML	330W X 660H MM	1000MM
MOROCCAN VASE 1 - SUSPENDED - LRG	495W X 990H MM	1500MM
MOROCCAN VASE 2 - SUSPENDED - SML	250W X 390H MM	730MM
MOROCCAN VASE 2 - SUSPENDED - LRG	375W X 585H MM	1090MM
MOROCCAN VASE 3 - SUSPENDED - SML	250W X 410H MM	750MM
MOROCCAN VASE 3 - SUSPENDED - LRG	375W X 615H MM	1125MM
MOROCCAN VASE 4 - SUSPENDED - SML	165W X 540H MM	880MM
MOROCCAN VASE 4 - SUSPENDED - LRG	248W X 810H MM	1320MM
MOROCCAN VASE 5 - SUSPENDED - SML	270W X 370H MM	710MM
MOROCCAN VASE 5 - SUSPENDED - LRG	405W X 555H MM	1065MM
MOROCCAN VASE 1 - WALL LANTERN - SML	330 X 350W MM	990MM
MOROCCAN VASE 2 - WALL LANTERN - LRG	375 X 400W MM	1080MM

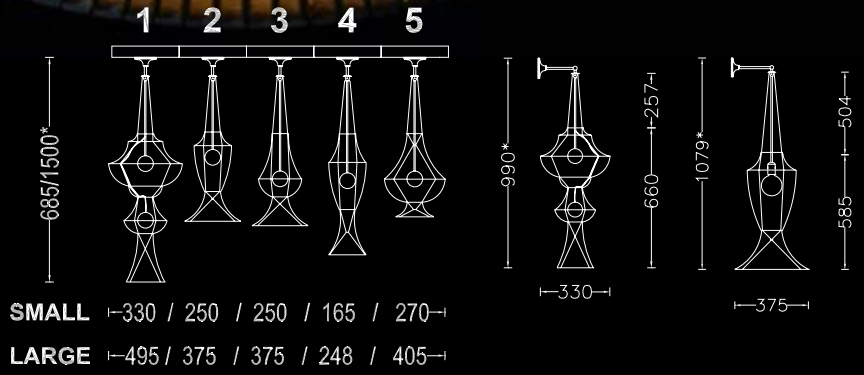

MOROCCAN VASES | MOROCCAN VASE 1 - SUSPENDED | MOROCCAN-1-S

DESCRIPTION

A collection of petite lamps inspired by the forms of and colours of Moroccan metal vases. This version is the most elaborate and is illuminated by two G9 Halogen or 3W LED lamps within a Pyrex glass balls.

PRODUCT SIZE

SHADE SIZE: 330W X 660H MM / TOTAL HEIGHT: 1000MM

PACKAGING DIMENSIONS

460MM(W) X 460MM(L) X 330MM(H)

LAMP TYPE & NO

2 X G9-HALOGEN 18-40 WATT LAMPS (36-80W) OR
2X G9-2.5W LEDS OR 2 X E12/14 // E26/27 LEDS

CLASS II
IP RATING 54
QC RATING 21

VOLTAGE RANGE
110 - 240 V

PRODUCT MARKS & RATINGS

WEIGHT 2.1KG
PACKED WEIGHT 5.1KG

TECHNICAL DRAWING

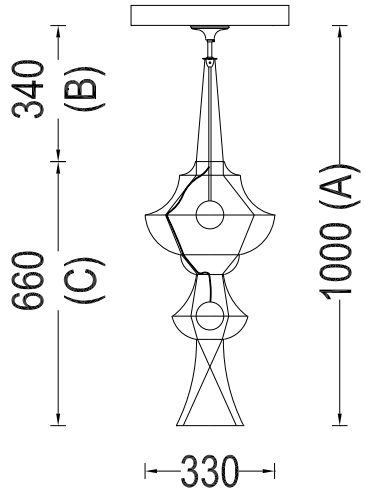

INTERACT

SELECT COLOUR

- SILVER *
- BRASS *
- COPPER *
- SMOKE *
- MIXED METALIC *
- RUST *
- WHITE
- RED
- BLACK

* METALLIC

CUSTOMISE DIMENSIONS

A
B

LAMP TYPE

QUANTITY

ADDITIONAL COMMENTS

WEB LINK DOWNLOAD

INDEX

MOROCCAN VASES | MOROCCAN VASE 2 - SUSPENDED | MOROCCAN-2-S

DESCRIPTION

A collection of petite lamps inspired by the forms of and colours of Moroccan metal vases. This version is and is illuminated by a G9 Halogen or 3W LED lamp within a Pyrex glass ball.

PRODUCT SIZE

SHADE SIZE: 250W X 390H MM / TOTAL HEIGHT: 730MM

PACKAGING DIMENSIONS

460MM(W) X 460MM(L) X 330MM(H)

LAMP TYPE & NO

1 X G9-HALOGEN 18-40 WATT LAMPS (40W) OR 1X G9-2.5W LEDS OR 1 X E12/14 // E26/27 LED

CLASS II
IP RATING 54
QC RATING 21

VOLTAGE RANGE
110 - 240 V

PRODUCT MARKS & RATINGS

WEIGHT 1KG
PACKED WEIGHT 4KG

TECHNICAL DRAWING

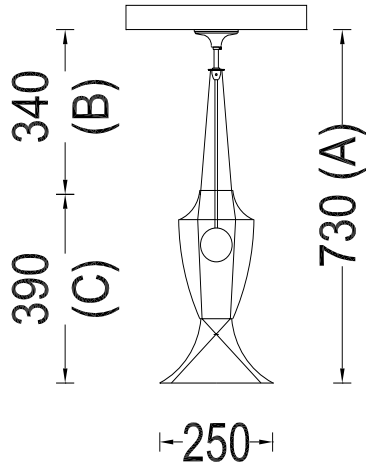

INTERACT

SELECT COLOUR

- SILVER *
- BRASS *
- COPPER *
- SMOKE *
- MIXED METALIC *
- RUST *
- WHITE
- RED
- BLACK

* METALLIC

CUSTOMISE DIMENSIONS

A
B

LAMP TYPE

QUANTITY

ADDITIONAL COMMENTS

WEB LINK DOWNLOAD

MOROCCAN VASES | MOROCCAN VASE 3 - SUSPENDED | MOROCCAN-3-S

DESCRIPTION

A collection of petite lamps inspired by the forms of and colours of Moroccan metal vases. This version is and is illuminated by a G9 Halogen or 3W LED lamp within a Pyrex glass ball.

PRODUCT SIZE

SHADE SIZE: 250W X 410H MM / TOTAL HEIGHT: 750MM

PACKAGING DIMENSIONS

460MM(W) X 460MM(L) X 330MM(H)

LAMP TYPE & NO

1 X G9-HALOGEN 18-40 WATT LAMPS (40W) OR 1X G9-2.5W LEDS OR 1 X E12/14 // E26/27 LED

CLASS II
IP RATING 54
QC RATING 21

VOLTAGE RANGE
110 - 240 V

PRODUCT MARKS & RATINGS

WEIGHT 1KG
PACKED WEIGHT 4KG

TECHNICAL DRAWING

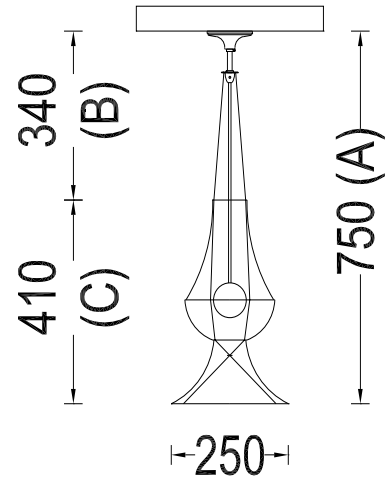

INTERACT

SELECT COLOUR

- SILVER *
- BRASS *
- COPPER *
- SMOKE *
- MIXED METALIC *
- RUST *
- WHITE
- RED
- BLACK

* METALLIC

CUSTOMISE DIMENSIONS

A
B

LAMP TYPE

QUANTITY

ADDITIONAL COMMENTS

WEB LINK DOWNLOAD

INDEX

MOROCCAN VASES | MOROCCAN VASE 4 - SUSPENDED | MOROCCAN-4-S

DESCRIPTION

A collection of petite lamps inspired by the forms of and colours of Moroccan metal vases. This 'skinny' version is and is illuminated by a G9 Halogen or 3W LED lamp within a Pyrex glass ball.

PRODUCT SIZE

SHADE SIZE: 165W X 540H MM / TOTAL HEIGHT: 880MM

PACKAGING DIMENSIONS

460MM(W) X 460MM(L) X 330MM(H)

LAMP TYPE & NO

1 X G9-HALOGEN 18-40 WATT LAMPS (40W) OR 1X G9-2.5W LEDS OR 1 X E12/14 // E26/27 LED

CLASS II
IP RATING 54
QC RATING 21

VOLTAGE RANGE
110 - 240 V

PRODUCT MARKS & RATINGS

WEIGHT 1KG
PACKED WEIGHT 4KG

TECHNICAL DRAWING

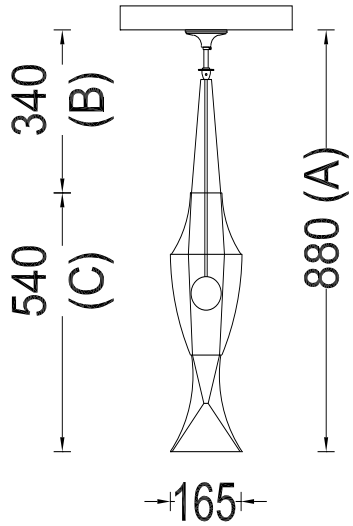

INTERACT

SELECT COLOUR

- SILVER *
- BRASS *
- COPPER *
- SMOKE *
- MIXED METALIC *
- RUST *
- WHITE
- RED
- BLACK

* METALLIC

CUSTOMISE DIMENSIONS

A
B

LAMP TYPE

QUANTITY

ADDITIONAL COMMENTS

WEB LINK DOWNLOAD

MOROCCAN VASES | MOROCCAN VASE 5 - SUSPENDED | MOROCCAN-5-S

DESCRIPTION

A collection of petite lamps inspired by the forms of and colours of Moroccan metal vases. This 'Fat' version is and is illuminated by a G9 Halogen or 3W LED lamp within a Pyrex glass ball.

PRODUCT SIZE

SHADE SIZE: 270W X 370H MM / TOTAL HEIGHT: 710MM

PACKAGING DIMENSIONS

460MM(W) X 460MM(L) X 330MM(H)

LAMP TYPE & NO

1 X G9-HALOGEN 18-40 WATT LAMPS (40W) OR 1X G9-2.5W LEDS OR 1 X E12/14 // E26/27 LED

CLASS II
IP RATING 54
QC RATING 21

VOLTAGE RANGE
110 - 240 V

PRODUCT MARKS & RATINGS

WEIGHT 1KG
PACKED WEIGHT 4KG

TECHNICAL DRAWING

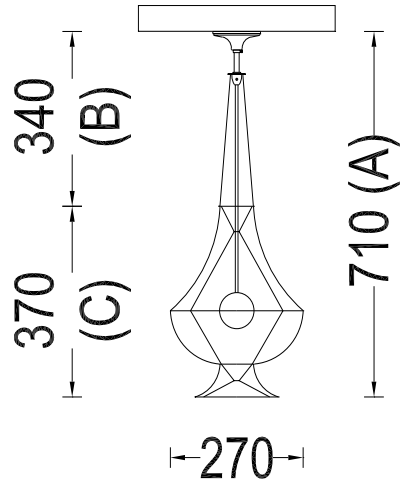

INTERACT

SELECT COLOUR

- SILVER *
- BRASS *
- COPPER *
- SMOKE *
- MIXED METALIC *
- RUST *
- WHITE
- RED
- BLACK

* METALLIC

CUSTOMISE DIMENSIONS

A
B

LAMP TYPE

QUANTITY

ADDITIONAL COMMENTS

WEB LINK DOWNLOAD

MOROCCAN VASES | MOROCCAN VASE 1 LARGE - SUSPENDED | MOROCCAN-1-LRG-S

DESCRIPTION

A collection of medium sized pendant lamps inspired by the forms of and colours of Moroccan metal vases. This version is the most elaborate and is illuminated by two G9 Halogen or 3W LED lamps within a Pyrex glass balls. Alternatively E27 LEDs can also be specified.

PRODUCT SIZE

SHADE SIZE: 495W X 990H MM / TOTAL HEIGHT: 1500MM

PACKAGING DIMENSIONS

610MM(W) X 610MM(L) X 330MM(H)

LAMP TYPE & NO

2 X G9-HALOGEN 18-40 WATT LAMPS (36-80W) OR
2X G9-2.5W LEDS OR 2 X E12/14 //E26/27 LEDS

CLASS II
IP RATING 54
QC RATING 21

VOLTAGE RANGE
110 - 240 V

PRODUCT MARKS & RATINGS

WEIGHT 5KG
PACKED WEIGHT 10KG

TECHNICAL DRAWING

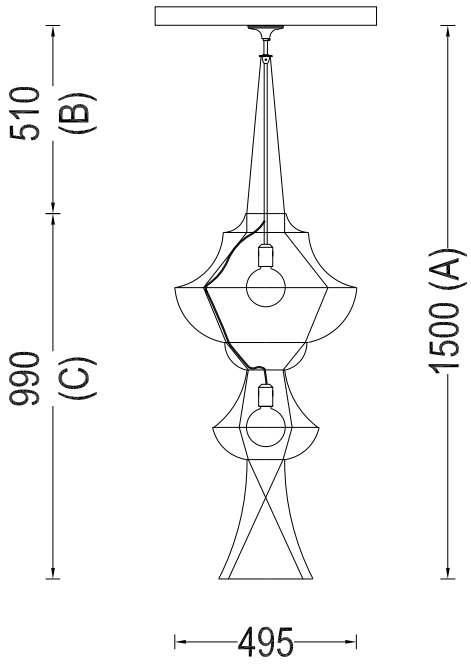

INTERACT

SELECT COLOUR

- SILVER *
- BRASS *
- COPPER *
- SMOKE *
- MIXED METALIC *
- RUST *
- WHITE
- RED
- BLACK

* METALLIC

CUSTOMISE DIMENSIONS

A
B

LAMP TYPE

QUANTITY

ADDITIONAL COMMENTS

WEB LINK DOWNLOAD

INDEX

MOROCCAN VASES | MOROCCAN VASE 2 LARGE - SUSPENDED | MOROCCAN-2-LRG-S

DESCRIPTION

A collection of medium sized pendant lamps inspired by the forms of and colours of Moroccan metal vases. This version is the most elaborate and is illuminated by a G9 Halogen or G9 3W LED lamp within a Pyrex glass ball. Alternatively E27 LEDs can also be specified.

PRODUCT SIZE

SHADE SIZE: 375W X 585H MM / TOTAL HEIGHT: 1090MM

PACKAGING DIMENSIONS

610MM(W) X 610MM(L) X 330MM(H)

LAMP TYPE & NO

1 X G9-HALOGEN 18-40 WATT LAMPS (40W) OR 1X G9-2.5W LEDS OR 1 X E12/14 // E26/27 LED

CLASS II
IP RATING 54
QC RATING 21

VOLTAGE RANGE
110 - 240 V

PRODUCT MARKS & RATINGS

WEIGHT 2.5KG

PACKED WEIGHT 8KG

TECHNICAL DRAWING

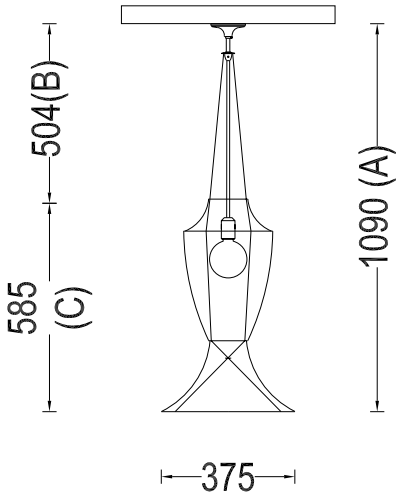

INTERACT

SELECT COLOUR

- SILVER *
- BRASS *
- COPPER *
- SMOKE *
- MIXED METALIC *
- RUST *
- WHITE
- RED
- BLACK

* METALLIC

CUSTOMISE DIMENSIONS

A
B

LAMP TYPE

QUANTITY

ADDITIONAL COMMENTS

WEB LINK DOWNLOAD

INDEX

MOROCCAN VASES | MOROCCAN VASE 3 LARGE - SUSPENDED | MOROCCAN-3-LRG-S

DESCRIPTION

A collection of medium sized pendant lamps inspired by the forms of and colours of Moroccan metal vases. This version is the most elaborate and is illuminated by a G9 Halogen or G9 3W LED lamp within a Pyrex glass ball. Alternatively E27 LEDs can also be specified.

PRODUCT SIZE

SHADE SIZE: 375W X 615H MM / TOTAL HEIGHT: 1125MM

PACKAGING DIMENSIONS

610MM(W) X 610MM(L) X 330MM(H)

LAMP TYPE & NO

1 X G9-HALOGEN 18-40 WATT LAMPS (40W) OR 1X G9-2.5W LEDS OR 1 X E12/14 // E26/27 LED

CLASS II
IP RATING 54
QC RATING 21

VOLTAGE RANGE
110 - 240 V

PRODUCT MARKS & RATINGS

WEIGHT 2.2KG

PACKED WEIGHT 7.2KG

TECHNICAL DRAWING

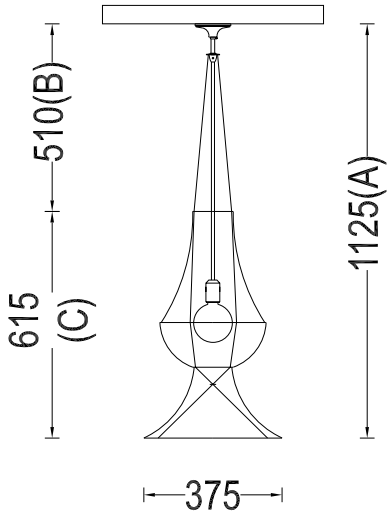

INTERACT

SELECT COLOUR

- SILVER *
- BRASS *
- COPPER *
- SMOKE *
- MIXED METALIC *
- RUST *
- WHITE
- RED
- BLACK

* METALLIC

CUSTOMISE DIMENSIONS

A
B

LAMP TYPE

QUANTITY

ADDITIONAL COMMENTS

WEB LINK DOWNLOAD

MOROCCAN VASES | MOROCCAN VASE 4 LARGE - SUSPENDED | MOROCCAN-4-LRG-S

DESCRIPTION

A collection of medium sized pendant lamps inspired by the forms of and colours of Moroccan metal vases. This version is the most elaborate and is illuminated by a G9 Halogen or G9 3W LED lamp within a Pyrex glass ball. Alternatively E27 LEDs can also be specified.

PRODUCT SIZE

SHADE SIZE: 248W X 810H MM / TOTAL HEIGHT: 1320MM

PACKAGING DIMENSIONS

610MM(W) X 610MM(L) X 330MM(H)

LAMP TYPE & NO

1 X G9-HALOGEN 18-40 WATT LAMPS (40W) OR 1X G9-2.5W LEDS OR 1 X E12/14 // E26/27 LED

CLASS II
IP RATING 54
QC RATING 21

VOLTAGE RANGE
110 - 240 V

PRODUCT MARKS & RATINGS

WEIGHT 2.2KG

PACKED WEIGHT 7.2KG

TECHNICAL DRAWING

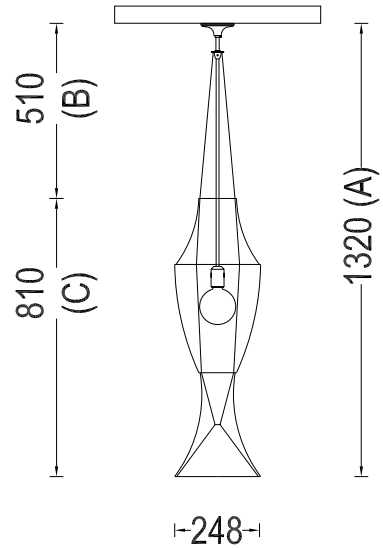

INTERACT

SELECT COLOUR

- SILVER *
- BRASS *
- COPPER *
- SMOKE *
- MIXED METALIC *
- RUST *
- WHITE
- RED
- BLACK

* METALLIC

CUSTOMISE DIMENSIONS

A
B

LAMP TYPE

QUANTITY

ADDITIONAL COMMENTS

WEB LINK DOWNLOAD

MOROCCAN VASES | MOROCCAN VASE 5 LARGE - SUSPENDED | MOROCCAN-5-LRG-S

DESCRIPTION

A collection of medium sized pendant lamps inspired by the forms of and colours of Moroccan metal vases. This version is the most elaborate and is illuminated by a G9 Halogen or G9 3W LED lamp within a Pyrex glass ball. Alternatively E27 LEDs can also be specified.

PRODUCT SIZE

SHADE SIZE: 405W X 555H MM / TOTAL HEIGHT: 1065MM

PACKAGING DIMENSIONS

610MM(W) X 610MM(L) X 330MM(H)

LAMP TYPE & NO

1 X G9-HALOGEN 18-40 WATT LAMPS (40W) OR 1X G9-2.5W LEDS OR 1 X E12/14 // E26/27 LED

CLASS II
IP RATING 54
QC RATING 21

VOLTAGE RANGE
110 - 240 V

PRODUCT MARKS & RATINGS

WEIGHT 2.6KG
PACKED WEIGHT 7.6KG

TECHNICAL DRAWING

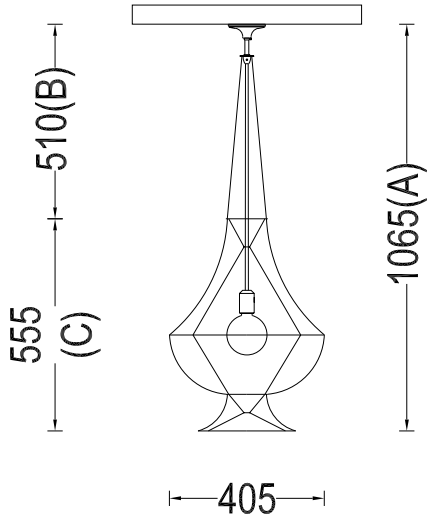

INTERACT

SELECT COLOUR

- SILVER *
- BRASS *
- COPPER *
- SMOKE *
- MIXED METALIC *
- RUST *
- WHITE
- RED
- BLACK

* METALLIC

CUSTOMISE DIMENSIONS

A
B

LAMP TYPE

QUANTITY

ADDITIONAL COMMENTS

WEB LINK DOWNLOAD

INDEX

MOROCCAN VASES | MOROCCAN VASE 1 - SMALL - WALL LANTERN | MORROCAN-1-SML-WL

DESCRIPTION

An extension of collection of our existing Moroccan Vases pendant collection, now available as a wall lantern. Illuminated by 2x G9 Halogen/LED bulbs within handmade clear or sandblasted pyrex glass ball with OR by 2x E27 vintage style LED bulbs.

PRODUCT SIZE

SHADE SIZE: 330 X 350W MM / TOTAL HEIGHT: 990MM

PACKAGING DIMENSIONS

460MM(W) X460MM(L) X 330MM(H)

LAMP TYPE & NO

2 X G9-HALOGEN 18-40 WATT LAMPS (36-80W) OR
2X G9-2.5W LEDS OR 2 X E12/14 // E26/27 LEDS

CLASS II
IP RATING 54
QC RATING 21

VOLTAGE RANGE
110-240V

PRODUCT MARKS & RATINGS CE

WEIGHT 2.1KG
PACKED WEIGHT 5.1KG

TECHNICAL DRAWING

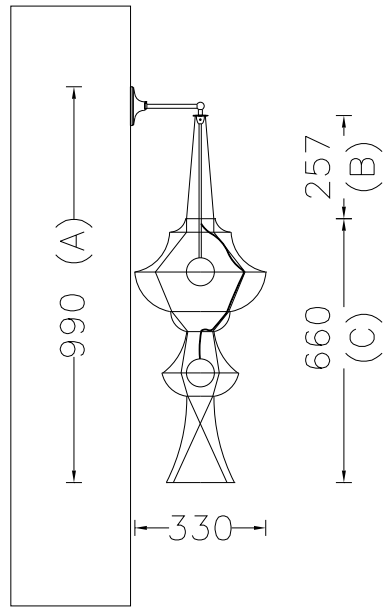

INTERACT

SELECT COLOUR

- SILVER *
- BRASS *
- COPPER *
- SMOKE *
- MIXED METALIC *
- RUST *
- WHITE
- RED
- BLACK

* METALLIC

CUSTOMISE DIMENSIONS

A
B
C

LAMP TYPE

QUANTITY

ADDITIONAL COMMENTS

WEB LINK DOWNLOAD

INDEX

MOROCCAN VASES | MOROCCAN VASE 2 - LARGE - WALL LANTERN | MORROCAN-2-LRG-WL

DESCRIPTION

An extension of collection of our existing Moroccan Vases pendant collection, now available as a wall lantern. Illuminated by 1x G9 Halogen/LED bulb within handmade clear or sandblasted pyrex glass ball with OR by 1x E27 vintage style LED bulb.

PRODUCT SIZE

SHADE SIZE: 900X180W X 72H MM / TOTAL HEIGHT: 600MM

PACKAGING DIMENSIONS

560MM(W) X 560MM(L) X 330MM(H)

LAMP TYPE & NO

1 X G9-HALOGEN 18-40 WATT LAMPS (40W) OR 1X G9-2.5W LEDS OR 1 X E12/14 // E26/27 LED

CLASS II
IP RATING 54
QC RATING 21

VOLTAGE RANGE
110-240V

PRODUCT MARKS & RATINGS CE

WEIGHT 2.5KG

PACKED WEIGHT 8KG

TECHNICAL DRAWING

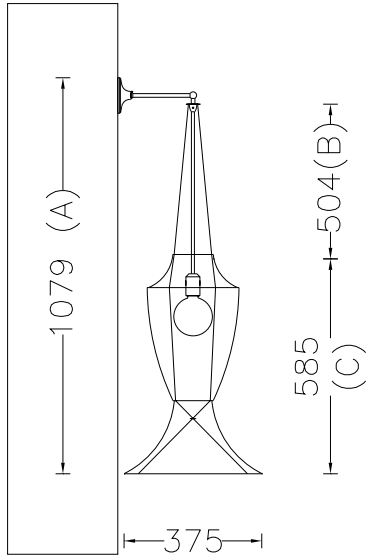

INTERACT

SELECT COLOUR

- SILVER *
- BRASS *
- COPPER *
- SMOKE *
- MIXED METALIC *
- RUST *
- WHITE
- RED
- BLACK

* METALLIC

CUSTOMISE DIMENSIONS

A
B
C

LAMP TYPE

QUANTITY

ADDITIONAL COMMENTS

WEB LINK DOWNLOAD

INDEX

a-peal

A-PEAL

DESCRIPTION

A PLAYFUL RANGE OF LAMPS NAMED AFTER THE FACT THAT THE DESIGN IS DERIVED FROM THE OUTLINE OF A PEEL OF A CITRUS FRUIT.

MODEL	SHADE SIZE	TOTAL HEIGHT
A-PEAL 1-TIER- SUSPENDED - 500	500W X 600H MM	950MM
A-PEAL 2-TIER- SUSPENDED - 500	500W X 1600H MM	1950MM

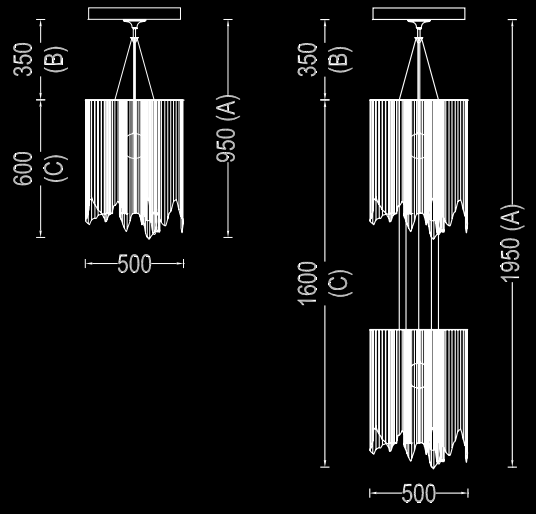

A-PEAL | A-PEAL 1-TIER- SUSPENDED - 500 | A-PEAL-1T-500-S

DESCRIPTION

A playful range of lamps named after the fact that the design is derived from the outline of peal of a citrus fruit. Illuminated by a single G9 Halogen or 3W LED lamp within a Pyrex glass ball.

PRODUCT SIZE

SHADE SIZE: 500W X 600H MM / TOTAL HEIGHT: 950MM

PACKAGING DIMENSIONS

810MM(W) X 810MM(L) X 330MM(H)

LAMP TYPE & NO

1 X G9-HALOGEN 18-40 WATT LAMPS OR 1X G9-2.5W LED OR 1 X E12/14 // E26/27 LED

CLASS II
IP RATING 54
QC RATING 21

VOLTAGE RANGE
110 - 240 V

PRODUCT MARKS & RATINGS CE

WEIGHT 6.5KG

PACKED WEIGHT 11.5KG

TECHNICAL DRAWING

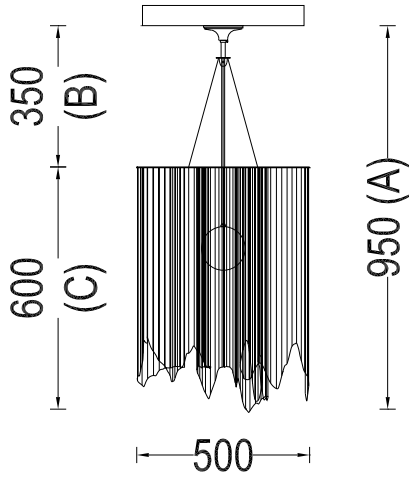

INTERACT

SELECT COLOUR

- SILVER *
- BRASS *
- COPPER *
- SMOKE *
- MIXED METALIC *
- RUST *
- WHITE
- RED
- BLACK

* METALLIC

CUSTOMISE DIMENSIONS

A
B

LAMP TYPE

QUANTITY

ADDITIONAL COMMENTS

WEB LINK DOWNLOAD

A-PEAL | A-PEAL 2-TIER- SUSPENDED - 500 | A-PEAL-2-250-S

DESCRIPTION

A playful range of lamps named after the fact that the design is derived from the outline of peal of a citrus fruit. This version is has 2 Tiers. Illuminated by two G9 Halogen or 3W LED lamps within a Pyrex glass balls.

PRODUCT SIZE

SHADE SIZE: 500W X 1600H MM / TOTAL HEIGHT: 1950MM

PACKAGING DIMENSIONS

810MM(W) X 810MM(L) X 330MM(H)

LAMP TYPE & NO

2 X G9-HALOGEN 18-40 WATT LAMPS OR 2X G9-2.5W LED OR 2 X E12/14 // E26/27 LED

CLASS II
IP RATING 54
QC RATING 21

VOLTAGE RANGE
110 - 240 V

PRODUCT MARKS & RATINGS CE

WEIGHT 13KG
PACKED WEIGHT 18KG

TECHNICAL DRAWING

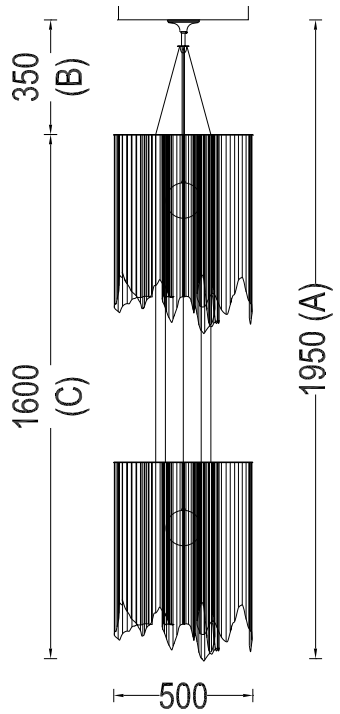

INTERACT

SELECT COLOUR

- SILVER *
- BRASS *
- COPPER *
- SMOKE *
- MIXED METALIC *
- RUST *
- WHITE
- RED
- BLACK

* METALLIC

CUSTOMISE DIMENSIONS

A
B
C

LAMP TYPE

QUANTITY

ADDITIONAL COMMENTS

WEB LINK DOWNLOAD

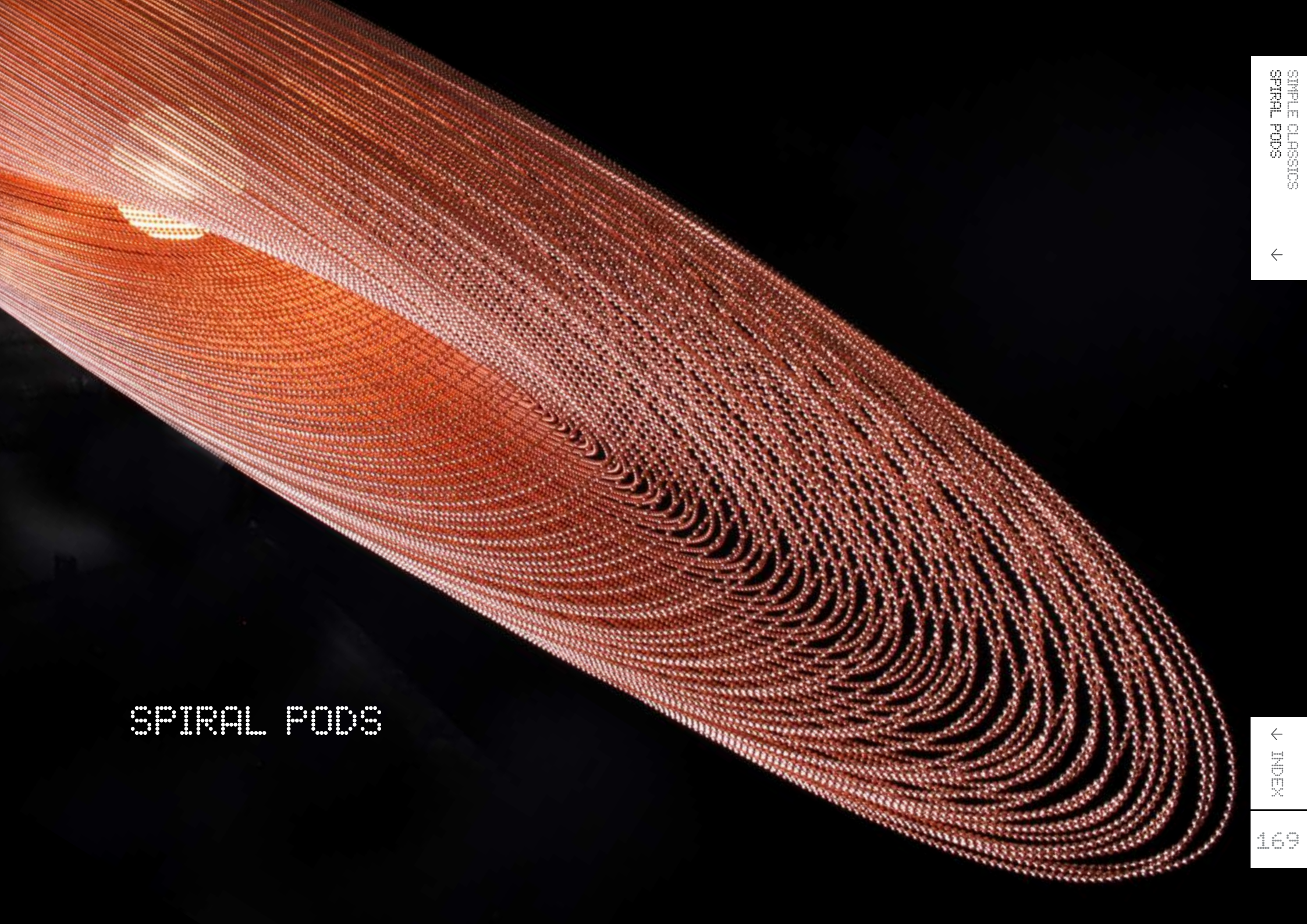

SPIRAL PODS

SPIRAL PODS

DESCRIPTION

A COLLECTION OF ELEGANT SPIRALING POD SHAPED LAMPS INSPIRED BY SPIRALING SHELLS. AVAILABLE AS A SINGLE OPEN SPIRAL OR A DOUBLE CLOSED SPIRAL WHICH WRAPS THROUGH ITSELF LIKE A 3D MOBIUS STRIP.

MODEL	SHADE SIZE	TOTAL HEIGHT
SINGLE SPIRAL POD - SUSPENDED - 400	400W X 1400H MM	1900MM
DOUBLE SPIRAL POD - SUSPENDED - 400	400W X 1400H MM	1900MM

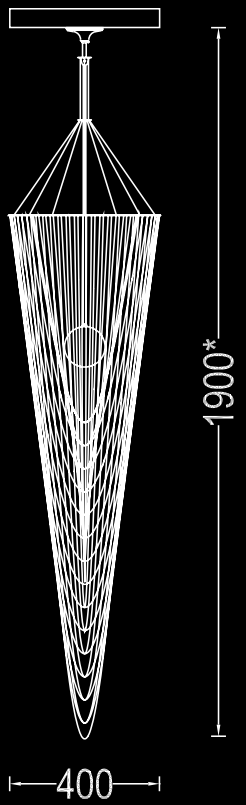

SPIRAL POD | SINGLE SPIRAL POD - SUSPENDED - 400 | SPOD-SINGLE-400-S

DESCRIPTION

An elegant spiraling pod shaped lamp inspired by spiraling shells. Illuminated by a suspended G9 Halogen or LED lamp within a Pyrex glass ball.

PRODUCT SIZE

SHADE SIZE: 400W X 1400H MM / TOTAL HEIGHT: 1900MM

PACKAGING DIMENSIONS

560MM(W) X 560MM(L) X 330MM(H)

LAMP TYPE & NO

1 X G9-HALOGEN 18-40 WATT LAMPS OR 1X G9-2.5W LED OR 1 X E26/27 LED

CLASS II
IP RATING 54
QC RATING 21

VOLTAGE RANGE
110 - 240 V

PRODUCT MARKS & RATINGS CE

WEIGHT 7KG

PACKED WEIGHT 11KG

TECHNICAL DRAWING

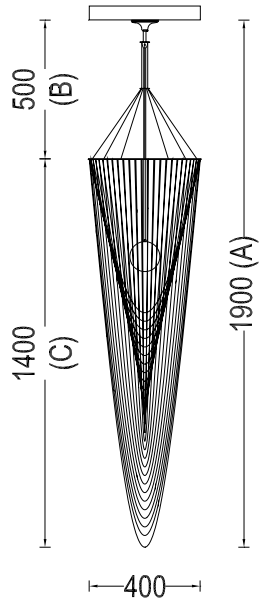

INTERACT

SELECT COLOUR

- SILVER *
- BRASS *
- COPPER *
- SMOKE *
- MIXED METALIC *
- RUST *
- WHITE
- RED
- BLACK

* METALLIC

CUSTOMISE DIMENSIONS

A
B

LAMP TYPE

QUANTITY

ADDITIONAL COMMENTS

WEB LINK DOWNLOAD

SPIRAL POD | DOUBLE SPIRAL POD - SUSPENDED - 400 | SPOD-DOUBLE-400-S

DESCRIPTION

A double closed spiral which wraps through itself like a 3d mobius strip. Inspired by spiraling shells. Illuminated by a suspended G9 Halogen or LED lamp within a Pyrex glass ball.

PRODUCT SIZE

SHADE SIZE: 400W X 1400H MM / TOTAL HEIGHT: 1900MM

PACKAGING DIMENSIONS

560MM(W) X 560MM(L) X 330MM(H)

LAMP TYPE & NO

1 X G9-HALOGEN 18-40 WATT LAMPS OR 1X G9-2.5W LED OR 1 X E26/27 LED

CLASS II
IP RATING 54
QC RATING 21

VOLTAGE RANGE
110 - 240 V

PRODUCT MARKS & RATINGS CE

WEIGHT 7KG
PACKED WEIGHT 11KG

TECHNICAL DRAWING

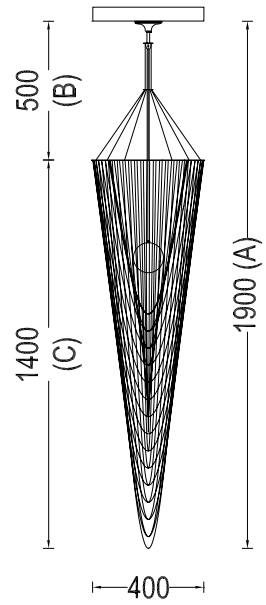

INTERACT

SELECT COLOUR

- SILVER *
- BRASS *
- COPPER *
- SMOKE *
- MIXED METALIC *
- RUST *
- WHITE
- RED
- BLACK

* METALLIC

CUSTOMISE DIMENSIONS

A
B

LAMP TYPE

QUANTITY

ADDITIONAL COMMENTS

WEB LINK DOWNLOAD

INDEX

EXTRA LONG POD

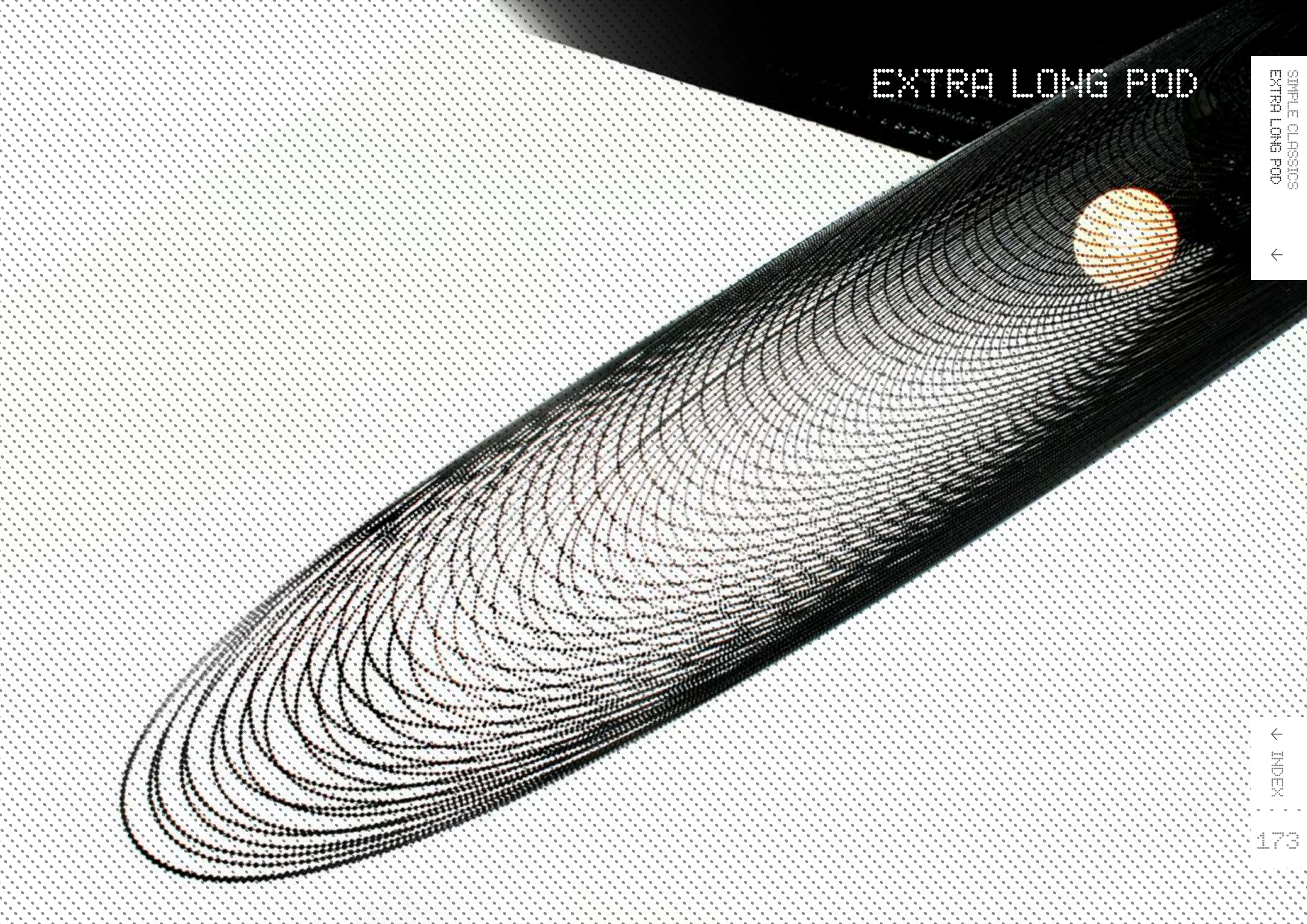

EXTRA LONG POD

DESCRIPTION

A VERY LONG AND SLEEK POD-SHAPED PENDANT. ILLUMINATED BY A PYREX GLASS BALL CONTAINING A G9-HALOGEN LAMP.

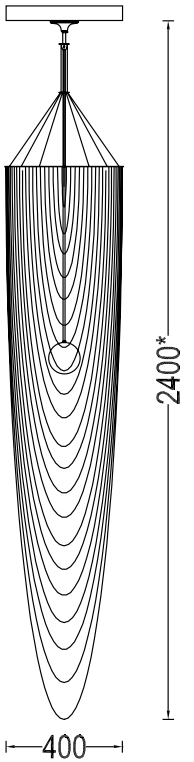

MODEL	SHADE SIZE	TOTAL HEIGHT
EXTRA LONG POD - 400	400W X 1900H MM	2400MM

EXTRA LONG POD | EXTRA LONG POD - 400 | LONG-POD-400-S

DESCRIPTION

An elongated Pod shaped pendant lamp. Made from lasercut stainless steel frames, chrome plated or lacqured, solid brass components and ballchain in several optional finishes. Illuminated by a pyrex glass ball containing a G9-Halogen lamp.

PRODUCT SIZE

SHADE SIZE: 400W X 1900H MM / TOTAL HEIGHT: 2400MM

PACKAGING DIMENSIONS

560MM(W) X 560MM(L) X 330MM(H)

LAMP TYPE & NO

1 X G9-HALOGEN 18-40 WATT LAMPS OR 1X G9-2.5W LED OR 1 X E26/27 LED

CLASS II
IP RATING 54
QC RATING 21

VOLTAGE RANGE
110 - 240V

PRODUCT MARKS & RATINGS

WEIGHT 7KG
PACKED WEIGHT 12KG

TECHNICAL DRAWING

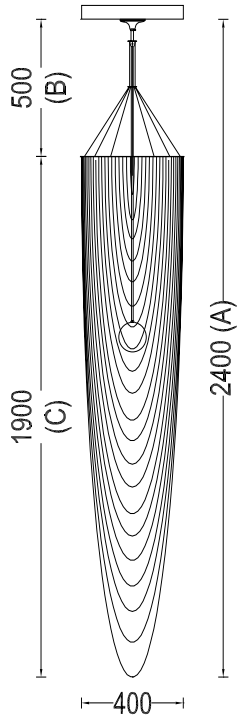

INTERACT

SELECT COLOUR

- SILVER *
- BRASS *
- COPPER *
- SMOKE *
- MIXED METALIC *
- RUST *
- WHITE
- RED
- BLACK

* METALLIC

CUSTOMISE DIMENSIONS

A
B
C

LAMP TYPE

QUANTITY

ADDITIONAL COMMENTS

WEB LINK **DOWNLOAD**

LONG LANTERNS

LONG LANTERNS

DESCRIPTION

A SMALL FAMILY OF 150MM WIDE BY 1M LONG LANTERNS. THESE LAMPS ARE ESPECIALLY BEAUTIFUL BECAUSE THE LOW VOLTAGE DOWNLIGHTS CREATE THE EFFECT OF A SHAFT OF LIGHT AND THE LIGHT SOURCE DOES NOT DOMINATE. AVAILABLE IN THREE STYLE OPTIONS: CROPPED, WILLOWED OR POD.

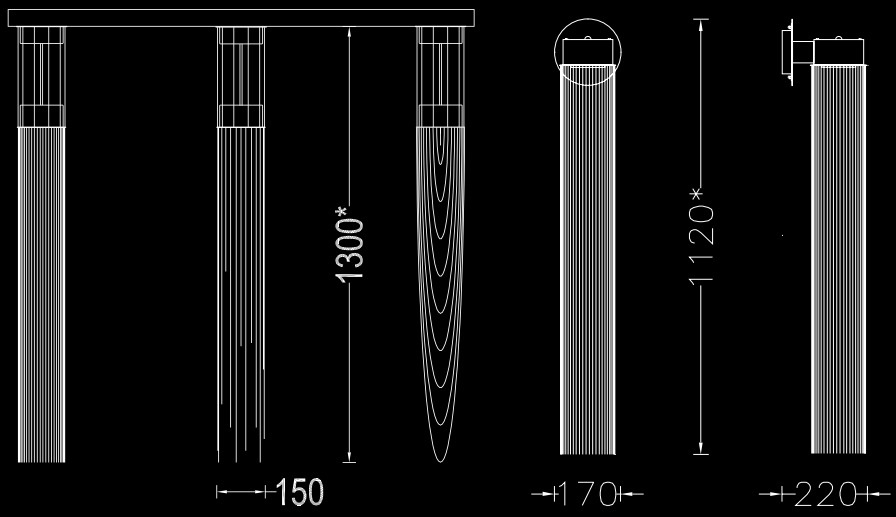

MODEL	SHADE SIZE	TOTAL HEIGHT	
LONG LANTERN - 150	150W X 1000H MM	1300MM	
LONG LANTERN - 150 - WALL SCONCE	150W X 1000H MM	170 X 220 X 1120 MM	

LONG LANTERNS | LONG LANTERN - 150 | LL-150-S

DESCRIPTION

A downlighter lantern. Made from lasercut stainless steel frames, chrome plated or lacqured, solid brass components and ballchain in several optional finishes. Illuminated by a GU.10 Halogen or LED downlight. Available in three optional styles CIRCULAR-CROPPED / CIRCULAR-WILLOWED / CIRCULAR-POD.

PRODUCT SIZE

SHADE SIZE: 150W X 1000H MM / TOTAL HEIGHT: 1300MM

PACKAGING DIMENSIONS

220MM(W) X 220MM(L) X 360MM(H)

LAMP TYPE & NO

1 X GU.10 50W (50W) OR 1X GU.10 3-5W LED

CLASS III
IP RATING 20
QC RATING 21

VOLTAGE RANGE
110 - 240V

PRODUCT MARKS & RATINGS

WEIGHT 3KG

PACKED WEIGHT 5KG

TECHNICAL DRAWING

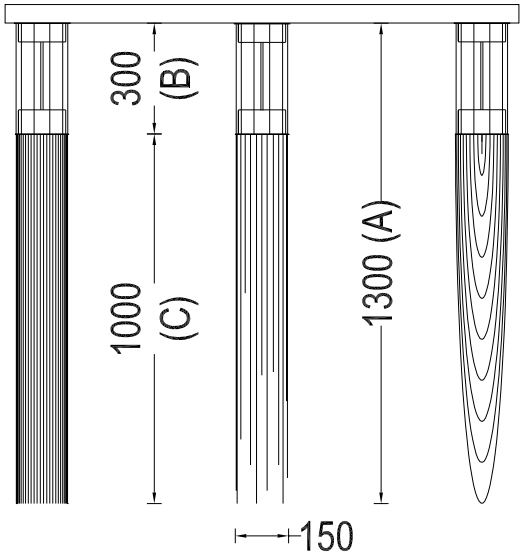

INTERACT

SELECT COLOUR

- SILVER *
- BRASS *
- COPPER *
- SMOKE *
- MIXED METALIC *
- RUST *
- WHITE
- RED
- BLACK

* METALLIC

CUSTOMISE DIMENSIONS

A
B
C

LAMP TYPE

QUANTITY

ADDITIONAL COMMENTS

WEB LINK | DOWNLOAD

LONG LANTERN | LONG LANTERN - WALL SCONCE - 150 | LL-150-WS

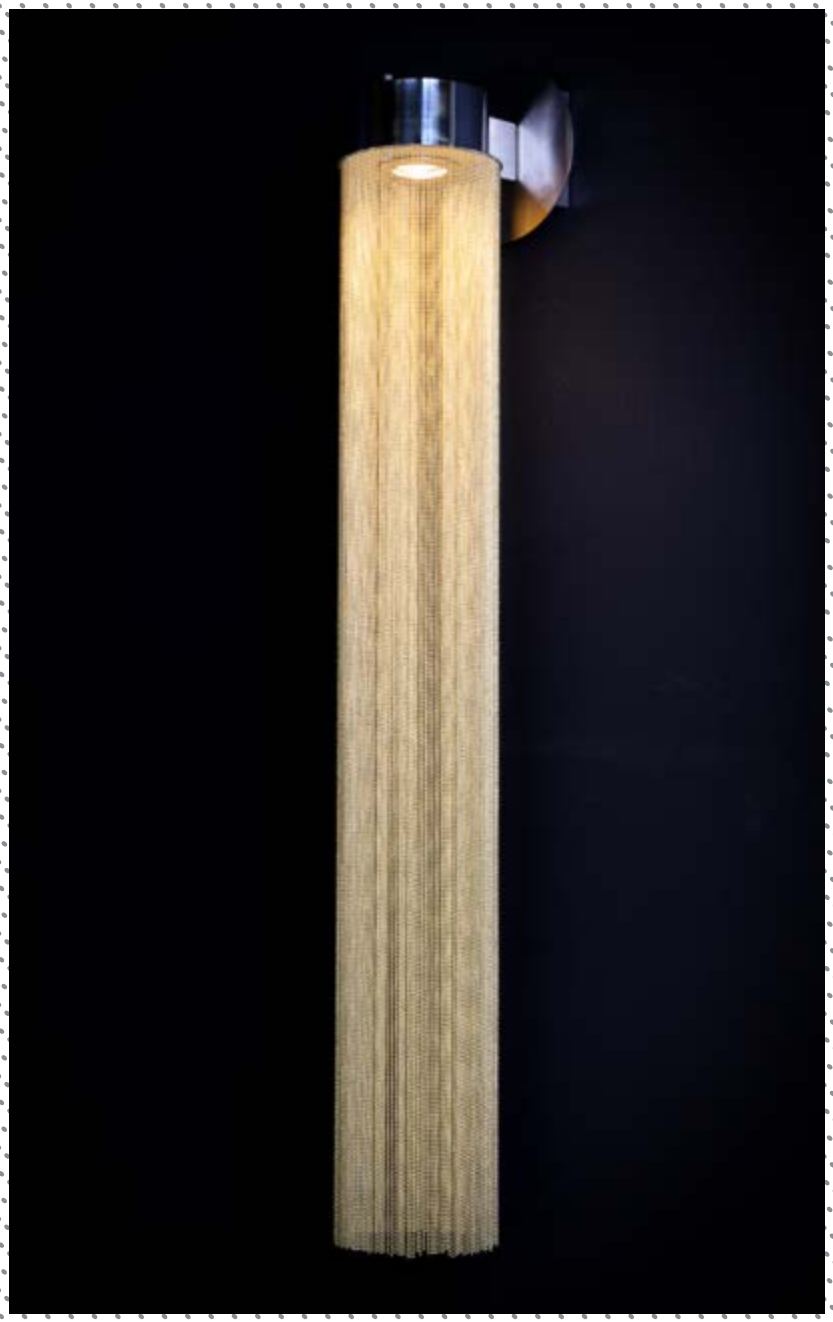

DESCRIPTION

An extension of the existing 'Long Lantern' collection now also available as a matching wall lantern/sconce. Illuminated by a GU.10 Halogen or LED downlight.

PRODUCT SIZE

SHADE SIZE: 150W X 1000H MM / TOTAL SIZE: 170X220X-1120MM

PACKAGING DIMENSIONS

300MM(W) X 300MM(L) X 340MM(H)

LAMP TYPE & NO

1 X GU.10 50W (50W) OR 1X GU.10 3-5W LED

CLASS I
IP RATING 20
QC RATING 21

VOLTAGE RANGE
110-240V

PRODUCT MARKS & RATINGS

WEIGHT 4KG

PACKED WEIGHT 7KG

TECHNICAL DRAWING

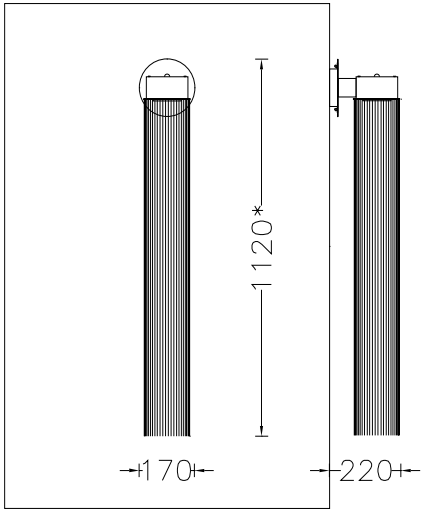

INTERACT

SELECT COLOUR

- SILVER *
- BRASS *
- COPPER *
- SMOKE *
- MIXED METALIC *
- RUST *
- WHITE
- RED
- BLACK

* METALLIC

CUSTOMISE DIMENSIONS

A
B

LAMP TYPE

QUANTITY

ADDITIONAL COMMENTS

WEB LINK DOWNLOAD

INDEX

CROCUS

Flowers always make people better, happier, and more helpful; they are sunshine, food and medicine for the soul.

Luther Burbank

CROCUS

DESCRIPTION

A 200MM WIDE PENDANT WITH LAYERED LOOPED CHAINS. INSPIRED BY FLOWER BUD FORMS. ILLUMINATED BY A PYREX GLASS BALL CONTAINING A G9-HALOGEN LAMP.

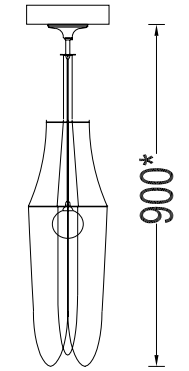

MODEL	SHADE SIZE	TOTAL HEIGHT
CROCUS - 200	200W X 650H MM	900MM

CROCUS | CROCUS - 200 | CROCUS-200-S

DESCRIPTION

A small `flower-bud` like miniture chandelier pendant lamp. Made from lasercut stainless steel frames, chrome plated or lacqured, solid brass components and ballchain in several optional finishes. Illuminated by a pyrex glass ball containing a G9-Halogen or LED lamp.

PRODUCT SIZE

SHADE SIZE: 200W X 650H MM / TOTAL HEIGHT: 900MM

PACKAGING DIMENSIONS

460MM(W) X 460MM(L) X 330MM(H)

LAMP TYPE & NO

1 X G9-HALOGEN 18-40 WATT LAMPS OR 1X G9-2.5W LED OR 1 X E12/14 // E26/27 LED

CLASS II
IP RATING 54
QC RATING 21

VOLTAGE RANGE
110 - 240V

PRODUCT MARKS & RATINGS

WEIGHT 2KG
PACKED WEIGHT 4KG

TECHNICAL DRAWING

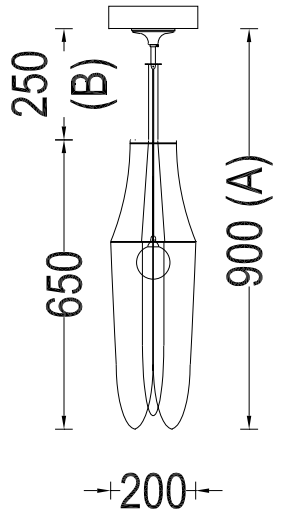

INTERACT

SELECT COLOUR

- SILVER *
- BRASS *
- COPPER *
- SMOKE *
- MIXED METALIC *
- RUST *
- WHITE
- RED
- BLACK

* METALLIC

CUSTOMISE DIMENSIONS

A
B

LAMP TYPE

QUANTITY

ADDITIONAL COMMENTS

WEB LINK DOWNLOAD

INDEX

FRANGIPANI

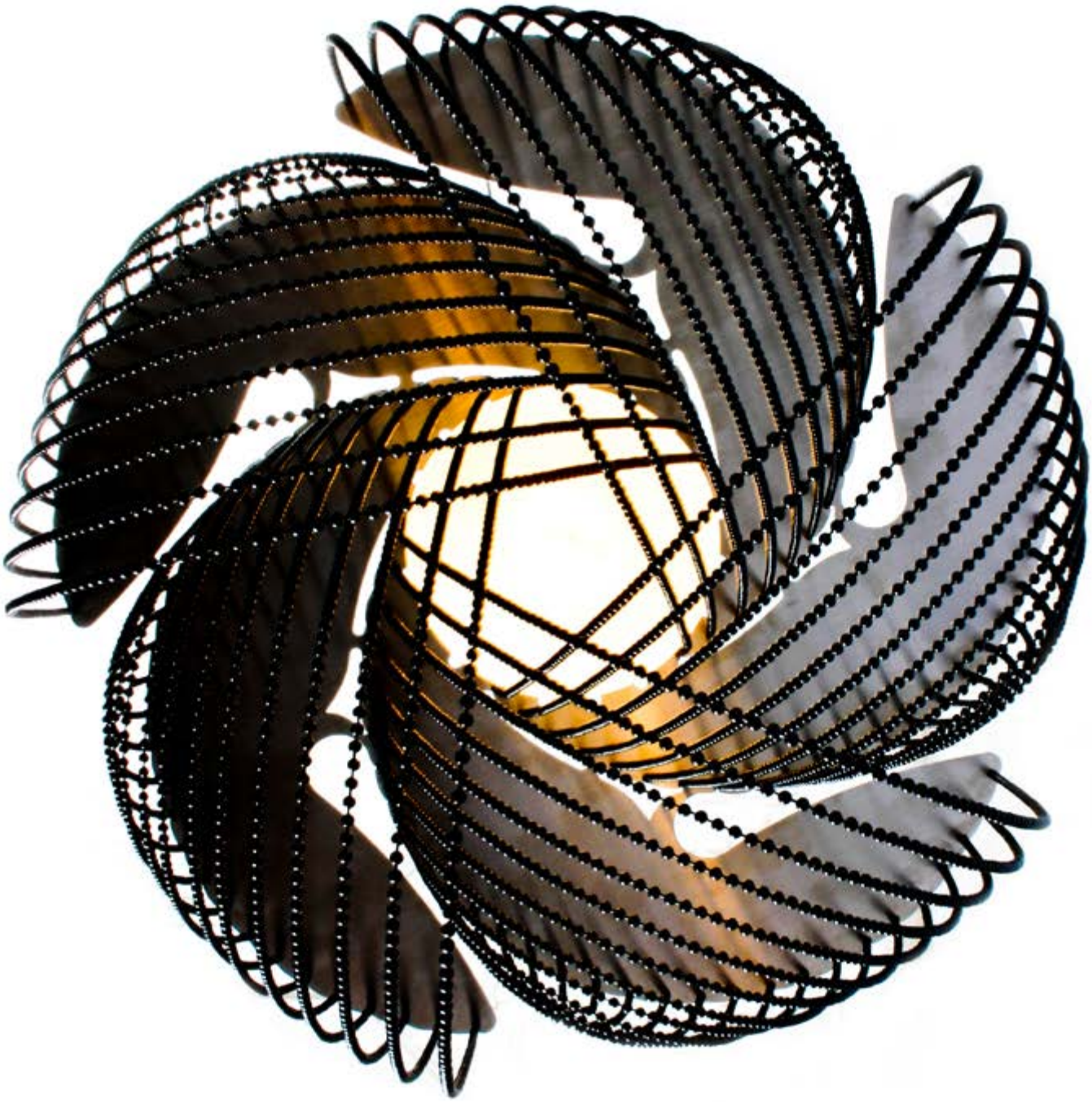

FRANGIPANI

DESCRIPTION

A 400MM WIDE MINI-CHANDELIER PENDANT WITH OVERLAPPING LOOPED CHAIN CURTAINS IN A ‘GRENADE’ PATTERN. INSPIRED BY THE SHAPE OF THE FRANGIPANI FLOWER. ILLUMINATED BY A PYREX GLASS BALL CONTAINING A G9-HALOGEN LAMP. THIS DESIGN HAS BEEN COVERED BY A ETL RATING FOR THE USA AND CANADA.

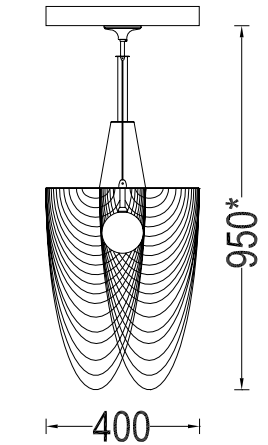

MODEL	SHADE SIZE	TOTAL HEIGHT
FRANGIPANI - 400	400W X 700H MM	950MM

FRANGIPANI | FRANGIPANI - 400 | FRANG-400-S

DESCRIPTION

A small `Frangipani flower` like miniture chandelier pendant lamp. Made from lasercut stainless steel frames, chrome plated or lacqured, solid brass components and ballchain in several optional finishes. Illuminated by a pyrex glass ball containing a G9-Halogen lamp.

PRODUCT SIZE

SHADE SIZE: 400W X 700H MM / TOTAL HEIGHT: 950MM

PACKAGING DIMENSIONS

560MM(W) X 560MM(L) X 330MM(H)

LAMP TYPE & NO

1 X G9-HALOGEN 18-40 WATT LAMPS OR 1X G9-2.5W LED OR 1 X E12/14 // E26/27 LED

CLASS II
IP RATING 54
QC RATING 21

VOLTAGE RANGE
110 - 240V

PRODUCT MARKS & RATINGS

WEIGHT 3KG
PACKED WEIGHT 8KG

TECHNICAL DRAWING

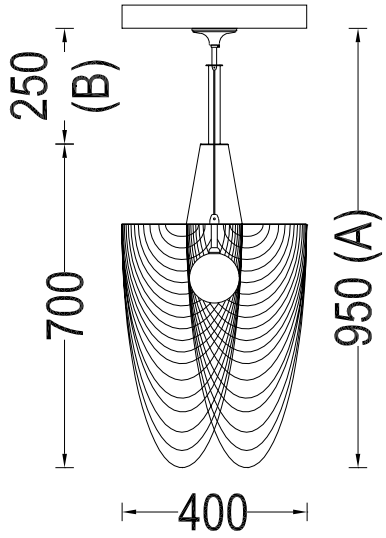

INTERACT

SELECT COLOUR

- SILVER *
- BRASS *
- COPPER *
- SMOKE *
- MIXED METALIC *
- RUST *
- WHITE
- RED
- BLACK

* METALLIC

CUSTOMISE DIMENSIONS

A
B

LAMP TYPE

QUANTITY

ADDITIONAL COMMENTS

WEB LINK DOWNLOAD

INDEX

LANTERN

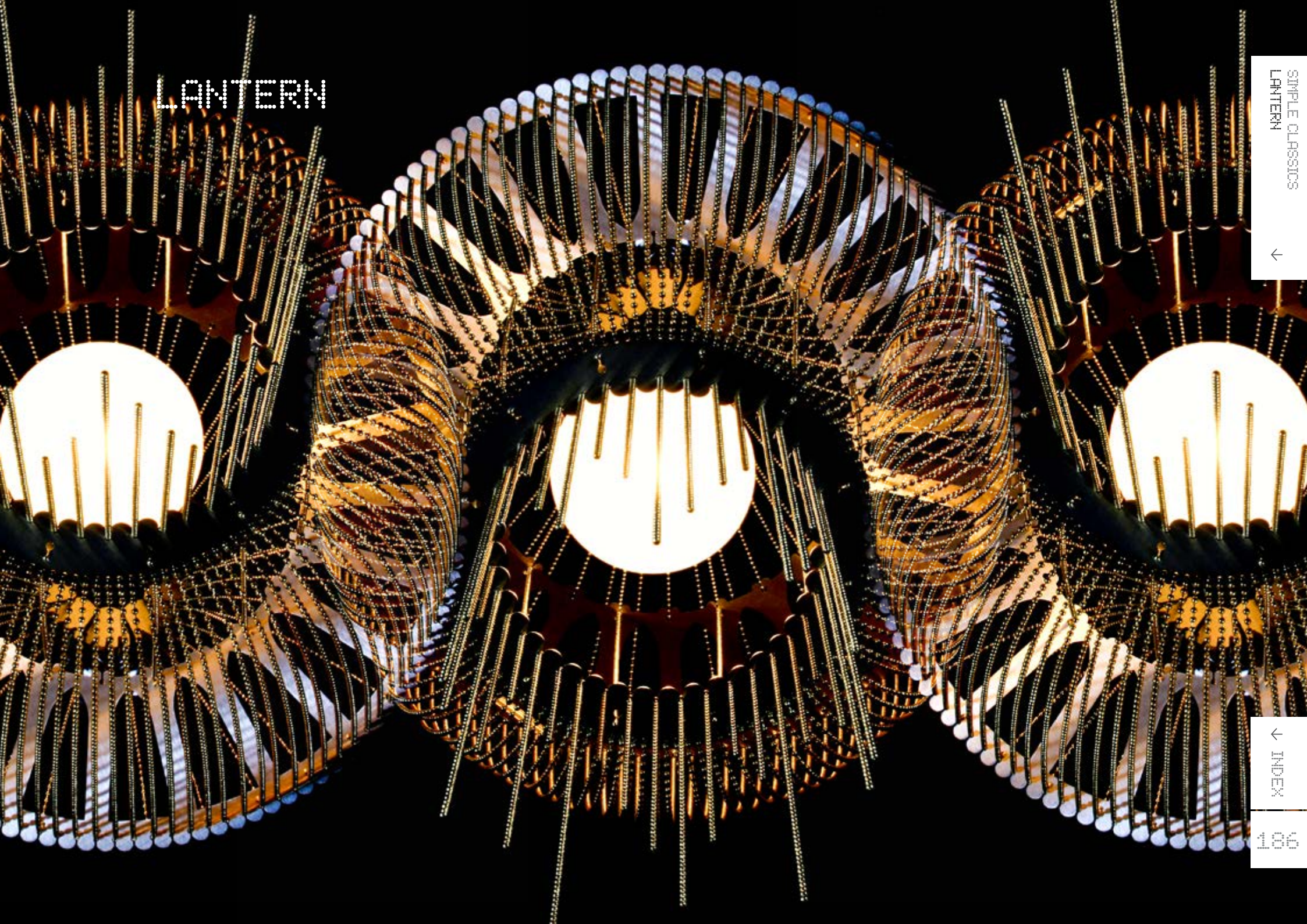

LANTERN

DESCRIPTION

A 400MM WIDE MINI-CHANDELIER PENDANT LANTERN REMINISCENT OF A CHINESE LANTERN. NOW ALSO AVAILABLE AS A WALL LANTERN AND WALL SCONCE.

PENDANT

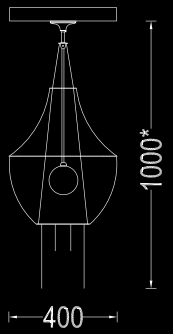

WALL LANTERN

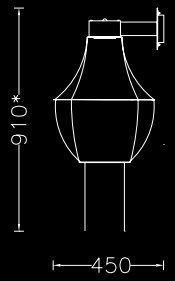

WALL SCONCE

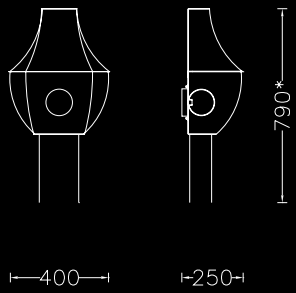

MODEL	SHADE SIZE	TOTAL HEIGHT
LANTERN - 400	400W X 750H MM	1000MM
LANTERN - 400 - WALL SCONCE	400 X 250W MM	790MM
LANTERN - 400 - WALL LANTERN	400 X 450W MM	910MM

LANTERN | LANTERN - 400 | LANTERN-400-S

DESCRIPTION

A small `chinease lantern` like miniture chandelier pendant lamp. Made from lasercut stainless steel frames, chrome plated or lacqured, solid brass components and ballchain in several optional finishes. Illuminated by a pyrex glass ball containing a G9-Halogen lamp.

PRODUCT SIZE

SHADE SIZE: 400W X 750H MM / TOTAL HEIGHT: 1000MM

PACKAGING DIMENSIONS

560MM(W) X 560MM(L) X 330MM(H)

LAMP TYPE & NO

1 X G9-HALOGEN 18-40 WATT LAMPS OR 1X G9-2.5W LED OR 1 X E12/14 // E26/27 LED

CLASS II
IP RATING 54
QC RATING 21

VOLTAGE RANGE
110 - 240V

PRODUCT MARKS & RATINGS

WEIGHT 3KG
PACKED WEIGHT 8KG

TECHNICAL DRAWING

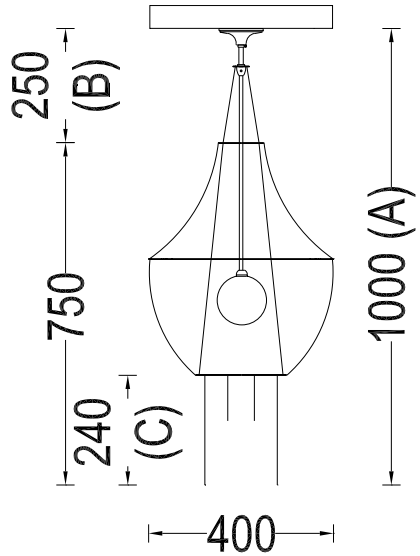

INTERACT

SELECT COLOUR

- SILVER *
- BRASS *
- COPPER *
- SMOKE *
- MIXED METALIC *
- RUST *
- WHITE
- RED
- BLACK

* METALLIC

CUSTOMISE DIMENSIONS

A
B
C

LAMP TYPE

QUANTITY

ADDITIONAL COMMENTS

WEB LINK | DOWNLOAD

INDEX

LANTERN | LANTERN - WALL LANTERN - 400 | LANTERN-400-WL

DESCRIPTION

An extension of the existing 'Lantern' collection now also available as a matching wall lantern. Illuminated by a GU.10 Halogen or LED downlight.

PRODUCT SIZE

SHADE SIZE: 400 X 450W MM / TOTAL HEIGHT: 910MM

PACKAGING DIMENSIONS

560MM(W) X 560MM(L) X 310MM(H)

LAMP TYPE & NO

1 X GU.10 50W (50W) OR 1X GU.10 3-5W LED

CLASS I
IP RATING 20
QC RATING 21

VOLTAGE RANGE
110-240V

PRODUCT MARKS & RATINGS

WEIGHT 4KG
PACKED WEIGHT 7KG

TECHNICAL DRAWING

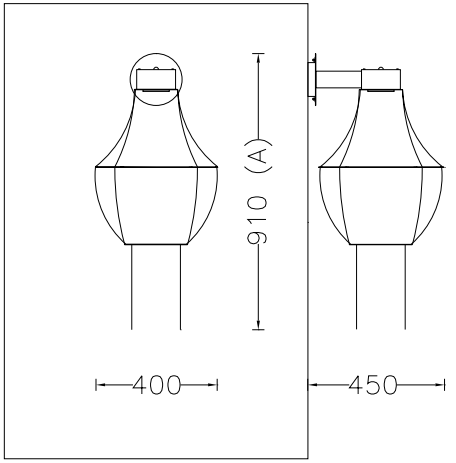

INTERACT

SELECT COLOUR

- SILVER *
- BRASS *
- COPPER *
- SMOKE *
- MIXED METALIC *
- RUST *
- WHITE
- RED
- BLACK

* METALLIC

CUSTOMISE DIMENSIONS

A
B

LAMP TYPE

QUANTITY

ADDITIONAL COMMENTS

WEB LINK DOWNLOAD

LANTERN | LANTERN - WALL SCONCE - 400 | LANTERN-400-WS

DESCRIPTION

An extension of the existing 'Lantern' collection now also available as a matching wall sconce. Illuminated by 1x G9 Halogen/LED bulb within handmade clear or sandblasted pyrex glass ball with OR by 1x E27 vintage style LED bulb.

PRODUCT SIZE

SHADE SIZE: 400 X 250W MM / TOTAL HEIGHT: 790MM

PACKAGING DIMENSIONS

510MM(W) X 620MM(L) X 320MM(H)

LAMP TYPE & NO

1 X G9-HALOGEN 18-40 WATT LAMPS OR 1X G9-2.5W LED. OR 1 X E12/14 // E26/27 LED

CLASS II
IP RATING 54
QC RATING 21

VOLTAGE RANGE
110-240V

PRODUCT MARKS & RATINGS CE

WEIGHT 3KG
PACKED WEIGHT 6KG

TECHNICAL DRAWING

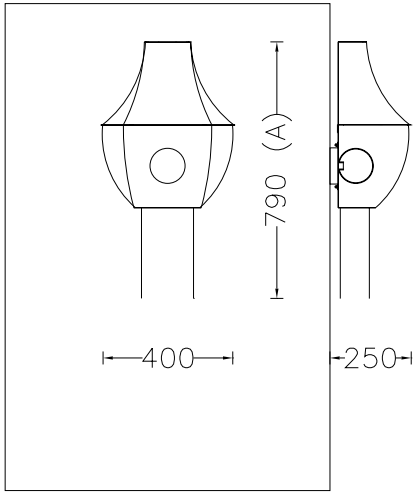

INTERACT

SELECT COLOUR

- SILVER *
- BRASS *
- COPPER *
- SMOKE *
- MIXED METALIC *
- RUST *
- WHITE
- RED
- BLACK

* METALLIC

CUSTOMISE DIMENSIONS

A
B

LAMP TYPE

QUANTITY

ADDITIONAL COMMENTS

WEB LINK DOWNLOAD

INDEX

SIMPLE LAMPS

PENDANTS, STANDING, TABLE
& WALL SCONCES

SIMPLE LAMPS

PENDANTS, STANDING, TABLE AND WALL SCONCES

To any artist, worthy of the name, all in nature is beautiful, because his eyes, fearlessly accepting all exterior truth, read there, as in an open book, all the inner truth. Auguste Rodin

CIRCULAR CROPPED

CIRCULAR WILLOW

CIRCULAR POD

SCALLOPED CROPPED

SCALLOPED WILLOW

SCALLOPED LOOPED

DOWNLIGHTER 'RETRO-FITS'

CIRCULAR CROPPED

WALL LANTERN

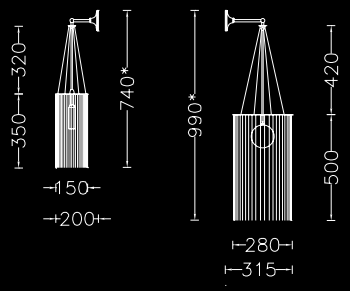

WALL SCONCE

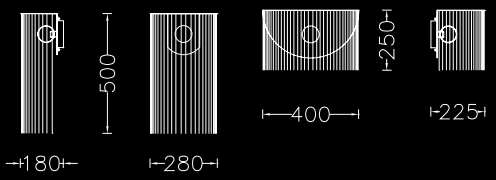

STANDING PENDANT TABLE

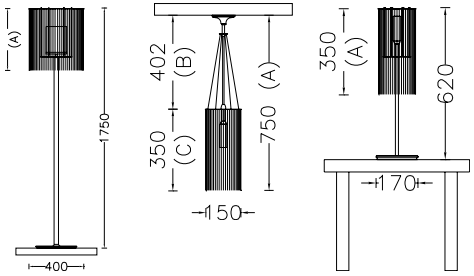

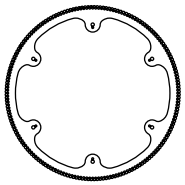

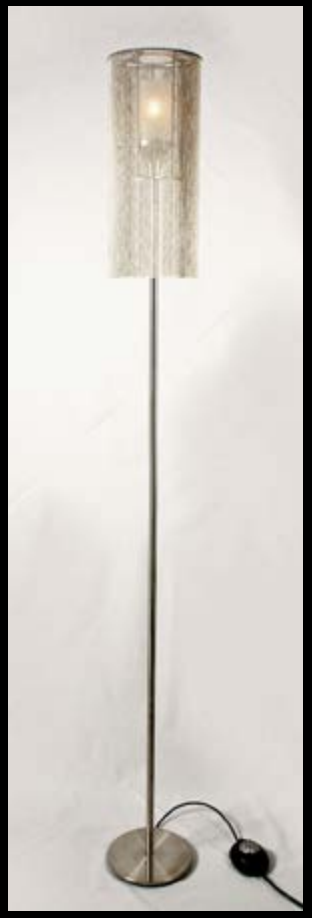

CIRCULAR CROPPED

DESCRIPTION

A FAMILY OF SIMPLE CLASSIC CIRCULAR CROPPED DRUM-SHAPED PENDANTS, TABLE LAMPS AND STANDING LAMPS. ILLUMINATED BY A PYREX GLASS DIFFUSER CONTAINING A G9-HALOGEN LAMP. AVAILABLE IN THREE DIAMETER SIZES: 150MM, 280MM AND 400MM.

MODEL	SHADE SIZE	TOTAL HEIGHT
CIRCULAR CROPPED 150 PENDANT LAMP	150W X 350-520H MM	750MM
CIRCULAR CROPPED 280 PENDANT LAMP	280W X 500-700H MM	1000MM
CIRCULAR CROPPED 400 PENDANT LAMP	400W X 450-820H MM	900-1250MM
CIRCULAR CROPPED 150 TABLE LAMP	150W X 350-520H MM	620MM
CIRCULAR CROPPED 280 TABLE LAMP	280W X 500-700H MM	750MM
CIRCULAR CROPPED 400 TABLE LAMP	400W X 450-700H MM	750MM
CIRCULAR CROPPED 150 STANDING LAMP	150W X 350-520H MM	1500MM
CIRCULAR CROPPED 280 STANDING LAMP	280W X 500-700H MM	1750MM
CIRCULAR CROPPED 400 STANDING LAMP	400W X 450-700H MM	1750MM
CIRCULAR CROPPED 280 WALL SCONCE	280 X 180W MM	500-700MM
CIRCULAR CROPPED 400 WALL SCONCE	400 X 225W MM	200-450MM
CIRCULAR CROPPED 150 WALL LANTERN	150X200W X 350-520MM	740MM
CIRCULAR CROPPED 280 WALL LANTERN	280X315W X 500-700MM	990MM

CIRCULAR CROPPED | CIRCULAR CROPPED 150 PENDANT LAMP | CIR-CRO-150(SML)-PEN

DESCRIPTION

A 150mm Dia. simple classic `circular-cropped` pendant lamp. Made from lasercut stainless steel frames, chrome plated or lacqured, solid brass components and ballchain in several optional finishes. Illuminated by a pyrex glass ball containing a G9-Halogen or LED lamp.

PRODUCT SIZE

SHADE SIZE: 150W X 350-520H MM / TOTAL HEIGHT: 750MM

PACKAGING DIMENSIONS

220MM(W) X 220MM(L) X 200MM(H)

LAMP TYPE & NO

1 X G9-HALOGEN 18-40 WATT LAMPS (40W) OR 1X G9-2.5W LEDS. OR 1 X E12/14 // E26/27 LED

CLASS II
IP RATING 20
QC RATING 21

VOLTAGE RANGE
110 - 240V

PRODUCT MARKS & RATINGS

WEIGHT 2KG
PACKED WEIGHT 3KG

TECHNICAL DRAWING

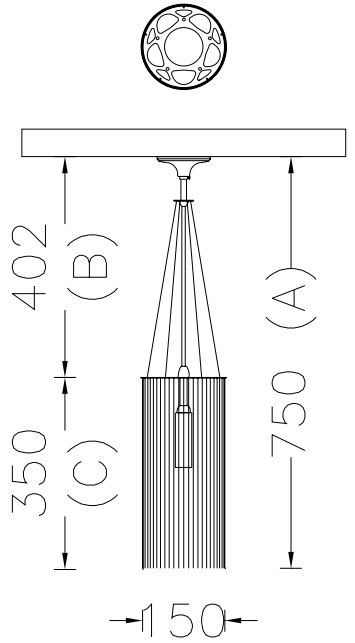

INTERACT

SELECT COLOUR

- SILVER *
- BRASS *
- COPPER *
- SMOKE *
- MIXED METALIC *
- RUST *
- WHITE
- RED
- BLACK

* METALLIC

CUSTOMISE DIMENSIONS

A
B
C

LAMP TYPE

QUANTITY

ADDITIONAL COMMENTS

WEB LINK **DOWNLOAD**

CIRCULAR CROPPED | CIRCULAR CROPPED 280 PENDANT LAMP | CIR-CRO-280(MED)-PEN

DESCRIPTION

A 280mm Dia. simple classic `circular-cropped` pendant lamp. Made from lasercut stainless steel frames, chrome plated or lacqured, solid brass components and ballchain in several optional finishes. Illuminated by a pyrex glass ball containing a G9-Halogen or LED lamp.

PRODUCT SIZE

SHADE SIZE: 280W X 500-700H MM / TOTAL HEIGHT: 1000MM

PACKAGING DIMENSIONS

460MM(W) X 460MM(L) X 330MM(H)

LAMP TYPE & NO

1 X G9-HALOGEN 18-40 WATT LAMPS (40W) OR 1X G9-2.5W LEDS. OR 1 X E12/14 // E26/27 LED

CLASS II
IP RATING 20
QC RATING 21

VOLTAGE RANGE
110 - 240V

PRODUCT MARKS & RATINGS

WEIGHT 3KG

PACKED WEIGHT 6KG

TECHNICAL DRAWING

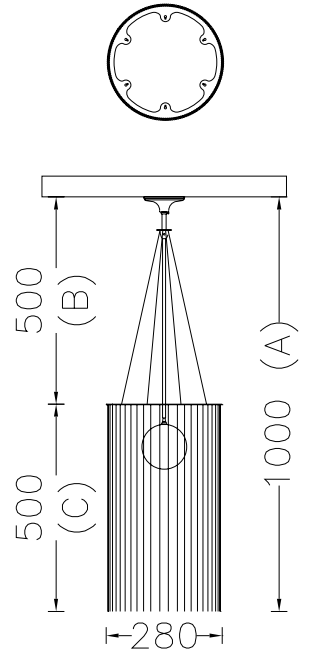

INTERACT

SELECT COLOUR

- SILVER *
- BRASS *
- COPPER *
- SMOKE *
- MIXED METALIC *
- RUST *
- WHITE
- RED
- BLACK

* METALLIC

CUSTOMISE DIMENSIONS

A
B
C

LAMP TYPE

QUANTITY

ADDITIONAL COMMENTS

WEB LINK DOWNLOAD

INDEX

CIRCULAR CROPPED | CIRCULAR CROPPED 400 PENDANT LAMP | CIR-CRO-400(LRG)-PEN

DESCRIPTION

A 400mm Dia. simple classic `circular-cropped` pendant lamp. Made from lasercut stainless steel frames, chrome plated or lacqured, solid brass components and ballchain in several optional finishes. Illuminated by a pyrex glass ball containing a G9-Halogen or LED lamp.

PRODUCT SIZE

SHADE SIZE: 400W X 450-820H MM / TOTAL HEIGHT: 900-1250MM

PACKAGING DIMENSIONS

560MM(W) X 560MM(L) X 330MM(H)

LAMP TYPE & NO

1 X G9-HALOGEN 18-40 WATT LAMPS (40W) OR 1X G9-2.5W LEDS. OR 1 X E12/14 // E26/27 LED

CLASS II
IP RATING 20
QC RATING 21

VOLTAGE RANGE
110 - 240V

PRODUCT MARKS & RATINGS

WEIGHT 4KG
PACKED WEIGHT 9KG

TECHNICAL DRAWING

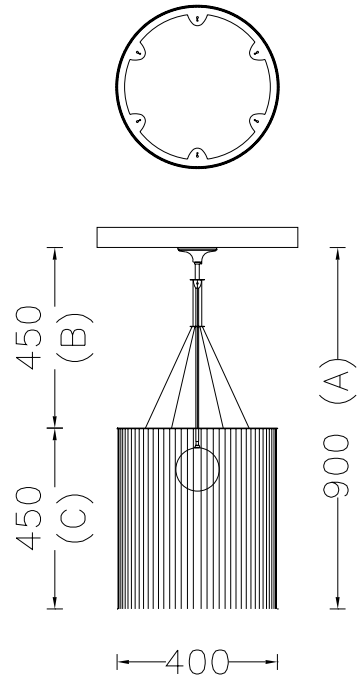

INTERACT

SELECT COLOUR

- SILVER *
- BRASS *
- COPPER *
- SMOKE *
- MIXED METALIC *
- RUST *
- WHITE
- RED
- BLACK

* METALLIC

CUSTOMISE DIMENSIONS

A
B
C

LAMP TYPE

QUANTITY

ADDITIONAL COMMENTS

WEB LINK DOWNLOAD

INDEX

CIRCULAR CROPPED | CIRCULAR CROPPED 150 TABLE LAMP | CIR-CRO-150(SML)-TBL

DESCRIPTION

A 150mm Dia. simple classic `circular-cropped` table lamp. Made from lasercut stainless steel frames, chrome plated or lacqured, solid brass components and ballchain in several optional finishes. Illuminated by a pyrex glass ball containing a G9-Halogen or LED lamp.

PRODUCT SIZE

SHADE SIZE: 150W X 350-520H MM / TOTAL HEIGHT: 620MM

PACKAGING DIMENSIONS

300MM(W) X 300MM(L) X 800MM(H)

LAMP TYPE & NO

1 X G9-HALOGEN 18-40 WATT LAMPS (40W) OR 1X G9-2.5W LED

CLASS II
IP RATING 20
QC RATING 21

VOLTAGE RANGE
110 - 240V

PRODUCT MARKS & RATINGS

WEIGHT 3KG

PACKED WEIGHT 7KG

TECHNICAL DRAWING

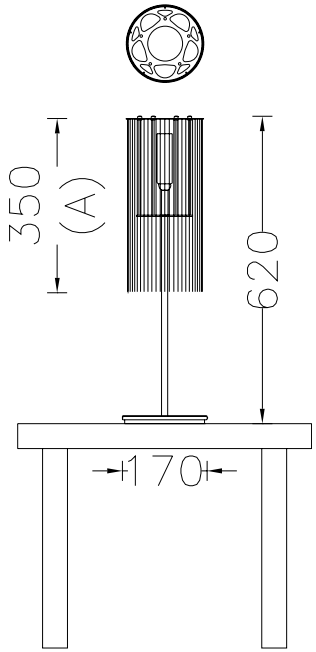

INTERACT

SELECT COLOUR

- SILVER *
- BRASS *
- COPPER *
- SMOKE *
- MIXED METALIC *
- RUST *
- WHITE
- RED
- BLACK

* METALLIC

CUSTOMISE DIMENSIONS

A

LAMP TYPE

QUANTITY

ADDITIONAL COMMENTS

WEB LINK DOWNLOAD

INDEX

CIRCULAR CROPPED | CIRCULAR CROPPED 280 TABLE LAMP | CIR-CRO-280(MED)-TBL

DESCRIPTION

A 280mm Dia. simple classic `circular-cropped` table lamp. Made from lasercut stainless steel frames, chrome plated or lacqured, solid brass components and ballchain in several optional finishes. Illuminated by a pyrex glass ball containing a G9-Halogen or LED lamp.

PRODUCT SIZE

SHADE SIZE: 280W X 500-700H MM / TOTAL HEIGHT: 750MM

PACKAGING DIMENSIONS

400MM(W) X 400MM(L) X 870MM(H)

LAMP TYPE & NO

1 X G9-HALOGEN 18-40 WATT LAMPS (40W) OR 1X G9-2.5W LEDS. OR 1 X E12/14 // E26/27 LED

CLASS II
IP RATING 20
QC RATING 21

VOLTAGE RANGE
110 - 240V

PRODUCT MARKS & RATINGS

WEIGHT 9KG
PACKED WEIGHT 14KG

TECHNICAL DRAWING

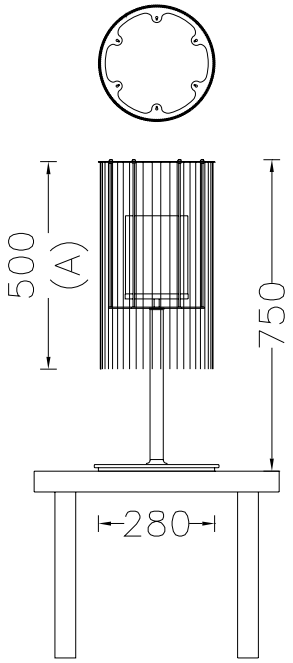

INTERACT

SELECT COLOUR

- SILVER *
- BRASS *
- COPPER *
- SMOKE *
- MIXED METALIC *
- RUST *
- WHITE
- RED
- BLACK

* METALLIC

CUSTOMISE DIMENSIONS

A

LAMP TYPE

QUANTITY

ADDITIONAL COMMENTS

WEB LINK DOWNLOAD

INDEX

CIRCULAR CROPPED | CIRCULAR CROPPED 400 TABLE LAMP | CIR-CRO-400(LRG)-TBL

DESCRIPTION

A 400mm Dia. simple classic `circular-cropped` table lamp. Made from lasercut stainless steel frames, chrome plated or lacqured, solid brass components and ballchain in several optional finishes. Illuminated by a pyrex glass ball containing a G9-Halogen or LED lamp.

PRODUCT SIZE

SHADE SIZE: 400W X 450-700H MM / TOTAL HEIGHT: 750MM

PACKAGING DIMENSIONS

480MM(W) X 480MM(L) X 870MM(H)

LAMP TYPE & NO

1 X G9-HALOGEN 18-40 WATT LAMPS (40W) OR 1X G9-2.5W LEDS. OR 1 X E12/14 // E26/27 LED

CLASS II
IP RATING 20
QC RATING 21

VOLTAGE RANGE
110 - 240V

PRODUCT MARKS & RATINGS CE

WEIGHT 10KG
PACKED WEIGHT 15KG

TECHNICAL DRAWING

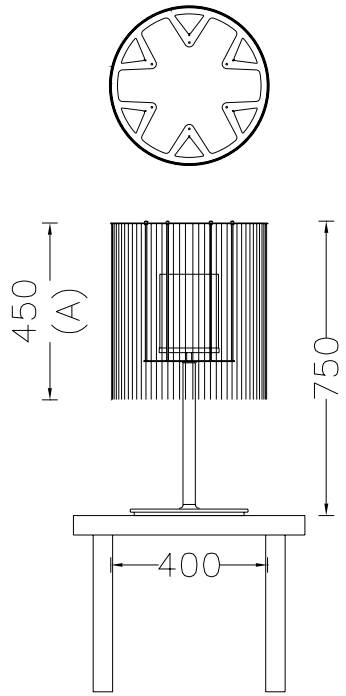

INTERACT

SELECT COLOUR

- SILVER *
- BRASS *
- COPPER *
- SMOKE *
- MIXED METALIC *
- RUST *
- WHITE
- RED
- BLACK

* METALLIC

CUSTOMISE DIMENSIONS

A

LAMP TYPE

QUANTITY

ADDITIONAL COMMENTS

WEB LINK DOWNLOAD

INDEX
288

CIRCULAR CROPPED | CIRCULAR CROPPED 150 STANDING LAMP | CIR-CRO-150(SML)-STA

DESCRIPTION

A 150mm Dia. simple classic `circular-cropped` standing lamp. Made from lasercut stainless steel frames, chrome plated or lacqured, solid brass components and ballchain in several optional finishes. Illuminated by a pyrex glass ball containing a G9-Halogen or LED lamp.

PRODUCT SIZE

SHADE SIZE: 150W X 350-520H MM / TOTAL HEIGHT: 1500MM

PACKAGING DIMENSIONS

300MM(W) X 300MM(L) X 1680MM(H)

LAMP TYPE & NO

1 X G9-HALOGEN 18-40 WATT LAMPS (40W) OR 1X G9-2.5W LED

CLASS II
IP RATING 20
QC RATING 21

VOLTAGE RANGE
110 - 240V

PRODUCT MARKS & RATINGS

WEIGHT 6KG
PACKED WEIGHT 10KG

TECHNICAL DRAWING

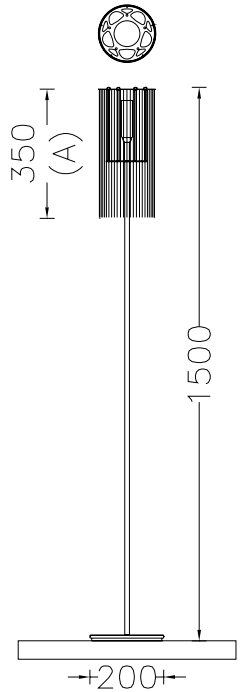

INTERACT

SELECT COLOUR

- SILVER *
- BRASS *
- COPPER *
- SMOKE *
- MIXED METALIC *
- RUST *
- WHITE
- RED
- BLACK

* METALLIC

CUSTOMISE DIMENSIONS

A

LAMP TYPE

QUANTITY

ADDITIONAL COMMENTS

WEB LINK **DOWNLOAD**

INDEX

CIRCULAR CROPPED | CIRCULAR CROPPED 280 STANDING LAMP | CIR-CRO-280(MED)-STA

DESCRIPTION

A 280mm Dia. simple classic `circular-cropped` standing lamp. Made from lasercut stainless steel frames, chrome plated or lacqured, solid brass components and ballchain in several optional finishes. Illuminated by a pyrex glass ball containing a G9-Halogen or LED lamp.

PRODUCT SIZE

SHADE SIZE: 280W X 500-700H MM / TOTAL HEIGHT: 1750MM

PACKAGING DIMENSIONS

400MM(W) X 400MM(L) X 1860MM(H)

LAMP TYPE & NO

1 X G9-HALOGEN 18-40 WATT LAMPS (40W) OR 1X G9-2.5W LEDS. OR 1 X E12/14 // E26/27 LED

CLASS II
IP RATING 20
QC RATING 21

VOLTAGE RANGE
110 - 240V

PRODUCT MARKS & RATINGS CE

WEIGHT 11KG
PACKED WEIGHT 18KG

TECHNICAL DRAWING

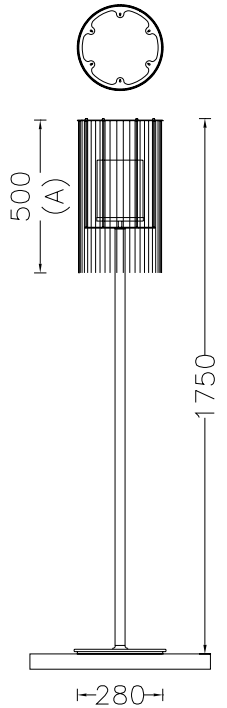

INTERACT

SELECT COLOUR

- SILVER *
- BRASS *
- COPPER *
- SMOKE *
- MIXED METALIC *
- RUST *
- WHITE
- RED
- BLACK

* METALLIC

CUSTOMISE DIMENSIONS

A

LAMP TYPE

QUANTITY

ADDITIONAL COMMENTS

WEB LINK **DOWNLOAD**

INDEX

CIRCULAR CROPPED | CIRCULAR CROPPED 400 STANDING LAMP | CIR-CRO-400(LRG)-STA

DESCRIPTION

A 400mm Dia. simple classic `circular-cropped` standing lamp. Made from lasercut stainless steel frames, chrome plated or lacqured, solid brass components and ballchain in several optional finishes. Illuminated by a pyrex glass ball containing a G9-Halogen or LED lamp.

PRODUCT SIZE

SHADE SIZE: 400W X 450-700H MM / TOTAL HEIGHT: 1750MM

PACKAGING DIMENSIONS

480MM(W) X 480MM(L) X 1860MM(H)

LAMP TYPE & NO

1 X G9-HALOGEN 18-40 WATT LAMPS (40W) OR 1X G9-2.5W LEDS. OR 1 X E12/14 // E26/27 LED

CLASS II
IP RATING 20
QC RATING 21

VOLTAGE RANGE
110 - 240V

PRODUCT MARKS & RATINGS CE

WEIGHT 14KG
PACKED WEIGHT 24KG

TECHNICAL DRAWING

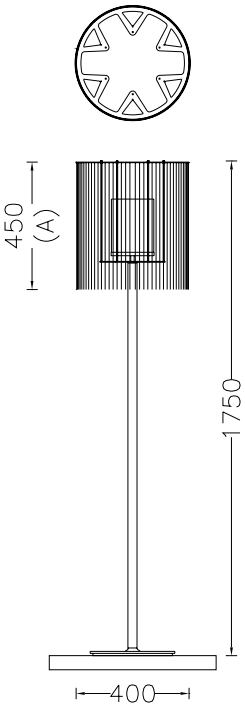

INTERACT

SELECT COLOUR

- SILVER *
- BRASS *
- COPPER *
- SMOKE *
- MIXED METALIC *
- RUST *
- WHITE
- RED
- BLACK

* METALLIC

CUSTOMISE DIMENSIONS

A

LAMP TYPE

QUANTITY

ADDITIONAL COMMENTS

WEB LINK DOWNLOAD

INDEX

SIMPLE LAMPS | CIRCULAR CROPPED - WALL SCONCE - 280 | CIR-CRO-280-WS

DESCRIPTION

An addition to our 'Circular Cropped' family. This simple elegant wall-sconce based on a metal frame folded in half at 90 degrees. The pattern of the frame above will cast dramatic shadows on the wall above. Illuminated by 1x G9 Halogen/LED bulb within handmade clear or sandblasted pyrex glass ball with OR by 1x E12/14 or E26/E27 vintage style LED bulb.The pattern of the frame above will cast dramatic

PRODUCT SIZE

SHADE SIZE: 280 X 180W MM / TOTAL HEIGHT: 500MM

PACKAGING DIMENSIONS

440MM(W) X 440MM(L) X 330MM(H)

LAMP TYPE & NO

1 X G9-HALOGEN 18-40 WATT LAMPS (40W) OR 1X G9-2.5W LEDS. OR 1 X E12/14 OR E26/27 LED

CLASS II
IP RATING 20
QC RATING 21

VOLTAGE RANGE
110-240V

PRODUCT MARKS & RATINGS

WEIGHT 2KG
PACKED WEIGHT 5KG

TECHNICAL DRAWING

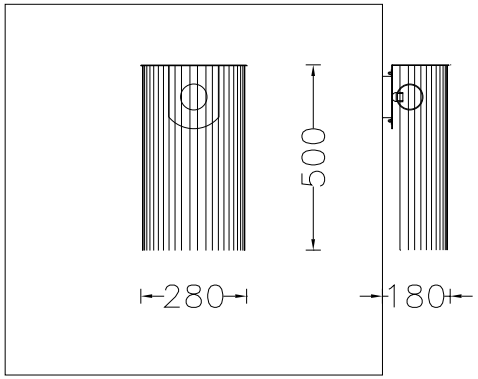

INTERACT

SELECT COLOUR

- SILVER *
- BRASS *
- COPPER *
- SMOKE *
- MIXED METALIC *
- RUST *
- WHITE
- RED
- BLACK

* METALLIC

CUSTOMISE DIMENSIONS

A
B

LAMP TYPE

QUANTITY

ADDITIONAL COMMENTS

WEB LINK DOWNLOAD

INDEX

SIMPLE LAMPS | CIRCULAR CROPPED - WALL SCONCE - 400 | CIR-CRO-400-WS

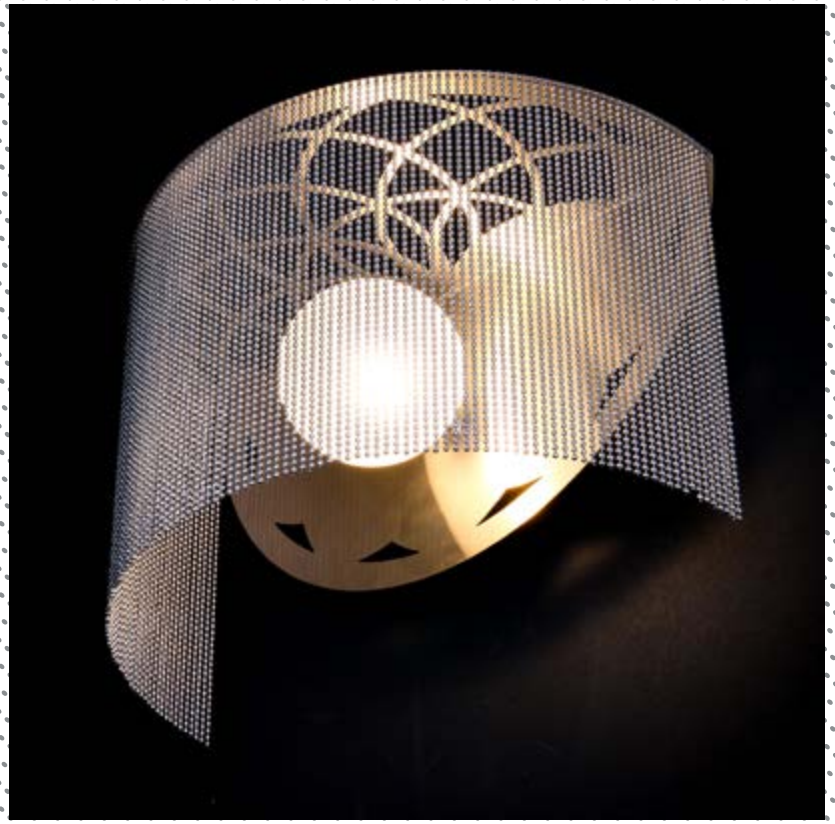

DESCRIPTION

An addition to our 'Circular Cropped' family. This simple elegant wall-sconce based on a circle folded in half at 90 degrees. The pattern of the frame above will cast dramatic shadows on the wall and ceiling above. Illuminated by 1x G9 Halogen/LED bulb within handmade clear or sandblasted pyrex glass ball with OR by 1x E12/14 or E26/E27 vintage style LED bulb.

PRODUCT SIZE

SHADE SIZE: 400 X 225W MM / TOTAL HEIGHT: 250MM

PACKAGING DIMENSIONS

330MM(W) X 480MM(L) X 330MM(H)

LAMP TYPE & NO

1 X G9-HALOGEN 18-40 WATT LAMPS (40W) OR 1X G9-2.5W LEDS. OR 1 X E12/14 OR E26/27 LED

CLASS II
IP RATING 20
QC RATING 21

VOLTAGE RANGE
110-240V

PRODUCT MARKS & RATINGS CE

WEIGHT 2.5KG
PACKED WEIGHT 6KG

TECHNICAL DRAWING

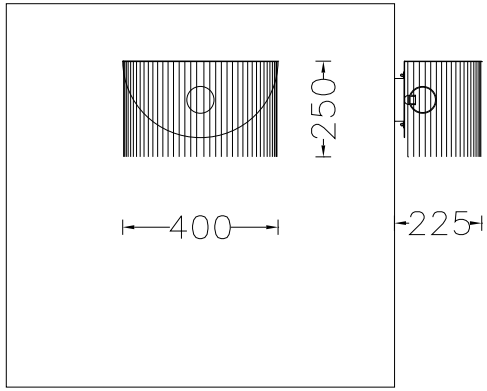

INTERACT

SELECT COLOUR

- SILVER *
- BRASS *
- COPPER *
- SMOKE *
- MIXED METALIC *
- RUST *
- WHITE
- RED
- BLACK

* METALLIC

CUSTOMISE DIMENSIONS

A
B

LAMP TYPE

QUANTITY

ADDITIONAL COMMENTS

WEB LINK DOWNLOAD

INDEX

SIMPLE LAMPS | CIRCULAR CROPPED - WALL LANTERN - 150 | CIR-CRO-150-WL

DESCRIPTION

An addition to our 'Circular Cropped' family in the 'Basic Lamps' collection - This simple elegant wall-lantern is identical to its pendant counterpart except it is mounted onto the wall instead of the ceiling. Illuminated by 1x G9 Halogen/LED bulb within handmade frosted pyrex glass diffuser with OR by 1x E12/14 vintage style LED bulb.

PRODUCT SIZE

SHADE SIZE: 150X200W X 350MM / TOTAL HEIGHT: 740MM

PACKAGING DIMENSIONS

310MM(W) X 310MM(L) X 310MM(H)

LAMP TYPE & NO

1 X G9-HALOGEN 18-40 WATT LAMPS (40W) OR 1X G9-2.5W LEDS. OR 1 X E12/14 // E26/27 LED

CLASS II
IP RATING 20
QC RATING 21

VOLTAGE RANGE
110-240V

PRODUCT MARKS & RATINGS CE

WEIGHT 1.3KG

PACKED WEIGHT 4KG

TECHNICAL DRAWING

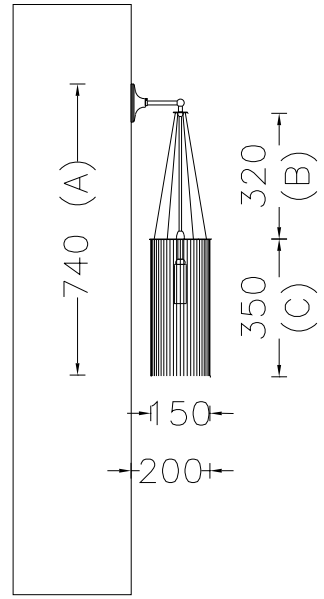

INTERACT

SELECT COLOUR

- SILVER *
- BRASS *
- COPPER *
- SMOKE *
- MIXED METALIC *
- RUST *
- WHITE
- RED
- BLACK

* METALLIC

CUSTOMISE DIMENSIONS

A
B
C

LAMP TYPE

QUANTITY

ADDITIONAL COMMENTS

WEB LINK DOWNLOAD

INDEX

SIMPLE LAMPS | CIRCULAR CROPPED - WALL LANTERN - 280 | CIR-CRO-280-WL

DESCRIPTION

An addition to our 'Circular Cropped' family in the 'Basic Lamps' collection - This simple elegant wall-lantern is identical to its pendant counterpart except it is mounted onto the wall instead of the ceiling. Illuminated by 1x G9 Halogen/LED bulb within handmade frosted pyrex glass diffuser with OR by 1x E12/14 vintage style LED bulb.

PRODUCT SIZE

SHADE SIZE: 280X315W X 500MM / TOTAL HEIGHT: 990MM

PACKAGING DIMENSIONS

440MM(W) X 440MM(L) X 330MM(H)

LAMP TYPE & NO

1 X G9-HALOGEN 18-40 WATT LAMPS (40W) OR 1X G9-2.5W LEDS. OR 1 X E12/14 // E26/27 LED

CLASS II
IP RATING 20
QC RATING 21

VOLTAGE RANGE
110-240V

PRODUCT MARKS & RATINGS CE

WEIGHT 3KG
PACKED WEIGHT 7KG

TECHNICAL DRAWING

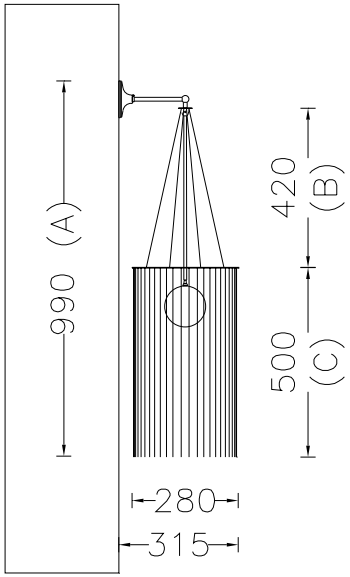

INTERACT

SELECT COLOUR

- SILVER *
- BRASS *
- COPPER *
- SMOKE *
- MIXED METALIC *
- RUST *
- WHITE
- RED
- BLACK

* METALLIC

CUSTOMISE DIMENSIONS

A
B
C

LAMP TYPE

QUANTITY

ADDITIONAL COMMENTS

WEB LINK DOWNLOAD

CIRCULAR WILLOW

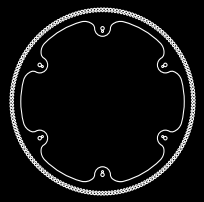

WALL SCONCE

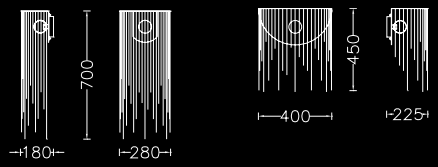

WALL LANTERN

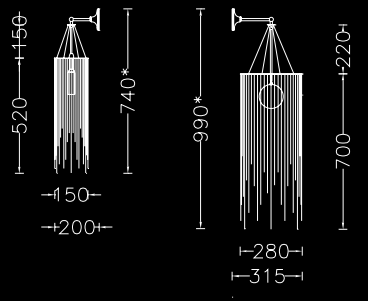

STANDING PENDANT TABLE

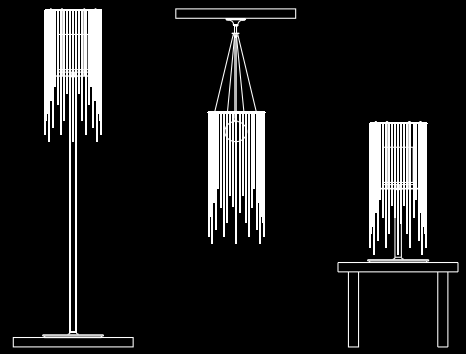

CIRCULAR WILLOW

DESCRIPTION

A FAMILY OF SIMPLE CLASSIC CIRCULAR WILLOW PENDANTS, TABLE LAMPS AND STANDING LAMPS, WITH WILLOWLAMP'S DISTINCTIVE FEATHERED EDGE DETAIL WHICH WE CALL 'WILLOW'. ILLUMINATED BY A PYREX GLASS DIFFUSER CONTAINING A G9-HALOGEN LAMP. AVAILABLE IN THREE DIAMETER SIZES: 150MM, 280MM AND 400MM.

MODEL	SHADE SIZE	TOTAL HEIGHT
CIRCULAR WILLOW 150 PENDANT LAMP	150W X 350-520H MM	750MM
CIRCULAR WILLOW 280 PENDANT LAMP	280W X 500-700H MM	1000MM
CIRCULAR WILLOW 400 PENDANT LAMP	400W X 450-820H MM	900-1250MM
CIRCULAR WILLOW 150 TABLE LAMP	150W X 350-520H MM	620MM
CIRCULAR WILLOW 280 TABLE LAMP	280W X 500-700H MM	750MM
CIRCULAR WILLOW 400 TABLE LAMP	400W X 450-700H MM	750MM
CIRCULAR WILLOW 150 STANDING LAMP	150W X 350-520H MM	1500MM
CIRCULAR WILLOW 280 STANDING LAMP	280W X 500-700H MM	1750MM
CIRCULAR WILLOW 400 STANDING LAMP	400W X 450-700H MM	1750MM
CIRCULAR WILLOW - WALL SCONCE - 280	280 X 180W MM	500-700MM
CIRCULAR WILLOW - WALL SCONCE - 400	400 X 225W MM	200-450MM
CIRCULAR WILLOW - WALL LANTERN - 150	150 X 200W X 350-520MM	740MM
CIRCULAR WILLOW - WALL LANTERN - 280	280 X 315W X 500-700MM	990MM

CIRCULAR WILLOW | CIRCULAR WILLOW 150 PENDANT LAMP | CIR-WIL-150(SML)-PEN

DESCRIPTION

A 150mm Dia. simple classic `circular-willow` pendant lamp. Made from lasercut stainless steel frames, chrome plated or lacqured, solid brass components and ballchain in several optional finishes. Illuminated by a pyrex glass ball containing a G9-Halogen or LED lamp.

PRODUCT SIZE

SHADE SIZE: 150W X 350-520H MM / TOTAL HEIGHT: 750MM

PACKAGING DIMENSIONS

220MM(W) X 220MM(L) X 200MM(H)

LAMP TYPE & NO

1 X G9-HALOGEN 18-40 WATT LAMPS (40W) OR 1X G9-2.5W LEDS. OR 1 X E12/14 // E26/27 LED

CLASS II
IP RATING 20
QC RATING 21

VOLTAGE RANGE
111 - 240V

PRODUCT MARKS & RATINGS

WEIGHT 2KG
PACKED WEIGHT 3KG

TECHNICAL DRAWING

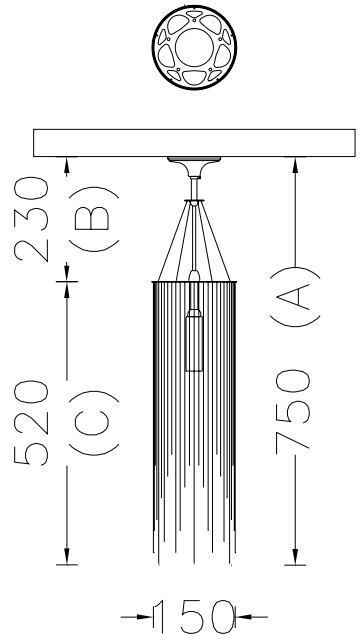

INTERACT

SELECT COLOUR

- SILVER *
- BRASS *
- COPPER *
- SMOKE *
- MIXED METALIC *
- RUST *
- WHITE
- RED
- BLACK

* METALLIC

CUSTOMISE DIMENSIONS

A
B
C

LAMP TYPE

QUANTITY

ADDITIONAL COMMENTS

WEB LINK **DOWNLOAD**

INDEX

CIRCULAR WILLOW | CIRCULAR WILLOW 280 PENDANT LAMP | CIR-WIL-280(MED)-PEN

DESCRIPTION

A 280mm Dia. simple classic `circular-willow` pendant lamp. Made from lasercut stainless steel frames, chrome plated or lacqured, solid brass components and ballchain in several optional finishes. Illuminated by a pyrex glass ball containing a G9-Halogen or LED lamp.

PRODUCT SIZE

SHADE SIZE: 280W X 500-700H MM / TOTAL HEIGHT: 1000MM

PACKAGING DIMENSIONS

460MM(W) X 460MM(L) X 330MM(H)

LAMP TYPE & NO

1 X G9-HALOGEN 18-40 WATT LAMPS (40W) OR 1X G9-2.5W LEDS. OR 1 X E12/14 // E26/27 LED

CLASS II
IP RATING 20
QC RATING 21

VOLTAGE RANGE
111 - 240V

PRODUCT MARKS & RATINGS

WEIGHT 3KG
PACKED WEIGHT 6KG

TECHNICAL DRAWING

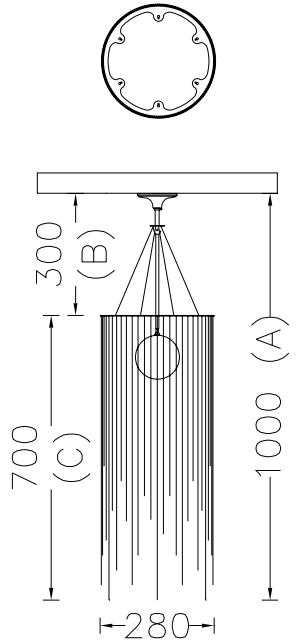

INTERACT

SELECT COLOUR

- SILVER *
- BRASS *
- COPPER *
- SMOKE *
- MIXED METALIC *
- RUST *
- WHITE
- RED
- BLACK

* METALLIC

CUSTOMISE DIMENSIONS

A
B
C

LAMP TYPE

QUANTITY

ADDITIONAL COMMENTS

WEB LINK **DOWNLOAD**

INDEX

CIRCULAR WILLOW | CIRCULAR WILLOW 400 PENDANT LAMP | CIR-WIL-400(LRG)-PEN

DESCRIPTION

A 400mm Dia. simple classic `circular-willow`` pendant lamp. Made from lasercut stainless steel frames, chrome plated or lacqured, solid brass components and ballchain in several optional finishes. Illuminated by a pyrex glass ball containing a G9-Halogen or LED lamp.

PRODUCT SIZE

SHADE SIZE: 400W X 450-820H MM / TOTAL HEIGHT: 900-1250MM

PACKAGING DIMENSIONS

560MM(W) X 560MM(L) X 330MM(H)

LAMP TYPE & NO

1 X G9-HALOGEN 18-40 WATT LAMPS (40W) OR 1X G9-2.5W LEDS. OR 1 X E12/14 // E26/27 LED

CLASS II
IP RATING 20
QC RATING 21

VOLTAGE RANGE
111 - 240V

PRODUCT MARKS & RATINGS

WEIGHT 4KG

PACKED WEIGHT 9KG

TECHNICAL DRAWING

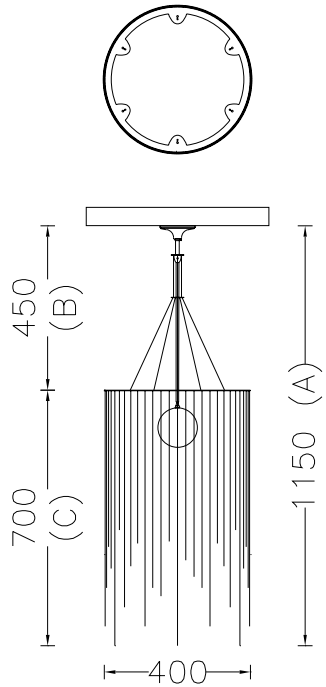

INTERACT

SELECT COLOUR

- SILVER *
- BRASS *
- COPPER *
- SMOKE *
- MIXED METALIC *
- RUST *
- WHITE
- RED
- BLACK

* METALLIC

CUSTOMISE DIMENSIONS

A
B
C

LAMP TYPE

QUANTITY

ADDITIONAL COMMENTS

WEB LINK DOWNLOAD

INDEX

CIRCULAR WILLOW | CIRCULAR WILLOW 150 TABLE LAMP | CIR-WIL-150(SML)-TBL

DESCRIPTION

A 150mm Dia. simple classic `circular-willow` table lamp. Made from lasercut stainless steel frames, chrome plated or lacqured, solid brass components and ballchain in several optional finishes. Illuminated by a pyrex glass ball containing a G9-Halogen or LED lamp.

PRODUCT SIZE

SHADE SIZE: 150W X 350-520H MM / TOTAL HEIGHT: 620MM

PACKAGING DIMENSIONS

300MM(W) X 300MM(L) X 800MM(H)

LAMP TYPE & NO

1 X G9-HALOGEN 18-40 WATT LAMPS (40W) OR 1X G9-2.5W LED

CLASS II
IP RATING 20
QC RATING 21

VOLTAGE RANGE
111 - 240V

PRODUCT MARKS & RATINGS

WEIGHT 3KG

PACKED WEIGHT 7KG

TECHNICAL DRAWING

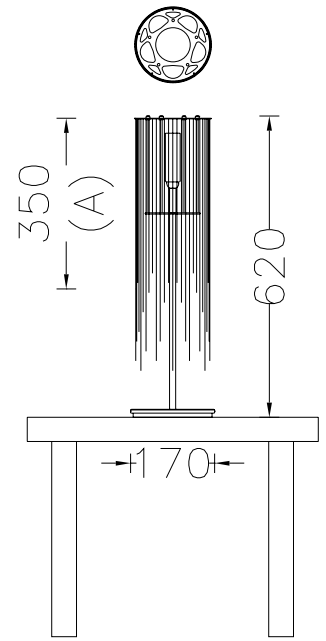

INTERACT

SELECT COLOUR

- SILVER *
- BRASS *
- COPPER *
- SMOKE *
- MIXED METALIC *
- RUST *
- WHITE
- RED
- BLACK

* METALLIC

CUSTOMISE DIMENSIONS

A

LAMP TYPE

QUANTITY

ADDITIONAL COMMENTS

WEB LINK DOWNLOAD

INDEX

CIRCULAR WILLOW | CIRCULAR WILLOW 280 TABLE LAMP | CIR-WIL-280(MED)-TBL

DESCRIPTION

A 280mm Dia. simple classic `circular-willow` table lamp. Made from lasercut stainless steel frames, chrome plated or lacqured, solid brass components and ballchain in several optional finishes. Illuminated by a pyrex glass ball containing a G9-Halogen or LED lamp.

PRODUCT SIZE

SHADE SIZE: 280W X 500-700H MM / TOTAL HEIGHT: 750MM

PACKAGING DIMENSIONS

400MM(W) X 400MM(L) X 870MM(H)

LAMP TYPE & NO

1 X G9-HALOGEN 18-40 WATT LAMPS (40W) OR 1X G9-2.5W LEDS. OR 1 X E12/14 // E26/27 LED

CLASS II
IP RATING 20
QC RATING 21

VOLTAGE RANGE
111 - 240V

PRODUCT MARKS & RATINGS CE

WEIGHT 9KG
PACKED WEIGHT 14KG

TECHNICAL DRAWING

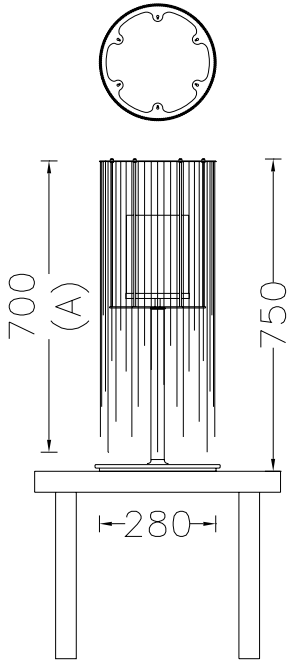

INTERACT

SELECT COLOUR

- SILVER *
- BRASS *
- COPPER *
- SMOKE *
- MIXED METALIC *
- RUST *
- WHITE
- RED
- BLACK

* METALLIC

CUSTOMISE DIMENSIONS

A

LAMP TYPE

QUANTITY

ADDITIONAL COMMENTS

WEB LINK DOWNLOAD

INDEX

CIRCULAR WILLOW | CIRCULAR WILLOW 400 TABLE LAMP | CIR-WIL-400(LRG)-TBL

DESCRIPTION

A 400mm Dia. simple classic `circular-willow` table lamp. Made from lasercut stainless steel frames, chrome plated or lacqured, solid brass components and ballchain in several optional finishes. Illuminated by a pyrex glass ball containing a G9-Halogen or LED lamp.

PRODUCT SIZE

SHADE SIZE: 400W X 450-700H MM / TOTAL HEIGHT: 750MM

PACKAGING DIMENSIONS

480MM(W) X 480MM(L) X 870MM(H)

LAMP TYPE & NO

1 X G9-HALOGEN 18-40 WATT LAMPS (40W) OR 1X G9-2.5W LEDS. OR 1 X E12/14 // E26/27 LED

CLASS II
IP RATING 20
QC RATING 21

VOLTAGE RANGE
111 - 240V

PRODUCT MARKS & RATINGS CE

WEIGHT 10KG
PACKED WEIGHT 15KG

TECHNICAL DRAWING

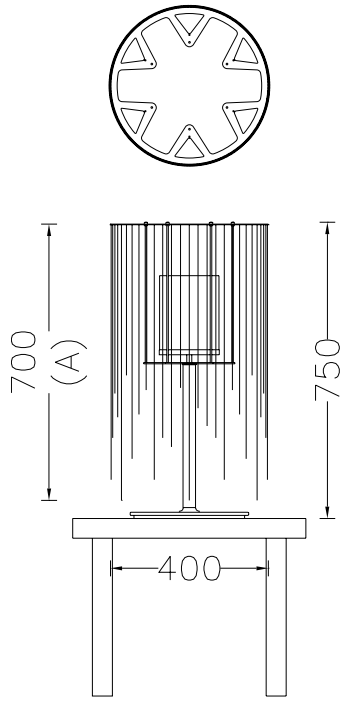

INTERACT

SELECT COLOUR

- SILVER *
- BRASS *
- COPPER *
- SMOKE *
- MIXED METALIC *
- RUST *
- WHITE
- RED
- BLACK

* METALLIC

CUSTOMISE DIMENSIONS

A

LAMP TYPE

QUANTITY

ADDITIONAL COMMENTS

WEB LINK DOWNLOAD

INDEX

CIRCULAR WILLOW | CIRCULAR WILLOW 150 STANDING LAMP | CIR-WIL-150(SML)-STA

DESCRIPTION

A 150mm Dia. simple classic `circular-willow` standing lamp. Made from lasercut stainless steel frames, chrome plated or lacqured, solid brass components and ballchain in several optional finishes. Illuminated by a pyrex glass ball containing a G9-Halogen or LED lamp.

PRODUCT SIZE

SHADE SIZE: 150W X 350-520H MM / TOTAL HEIGHT: 1500MM

PACKAGING DIMENSIONS

300MM(W) X 300MM(L) X 1680MM(H)

LAMP TYPE & NO

1 X G9-HALOGEN 18-40 WATT LAMPS (40W) OR 1X G9-2.5W LED

CLASS II
IP RATING 20
QC RATING 21

VOLTAGE RANGE
111 - 240V

PRODUCT MARKS & RATINGS

WEIGHT 6KG
PACKED WEIGHT 10KG

TECHNICAL DRAWING

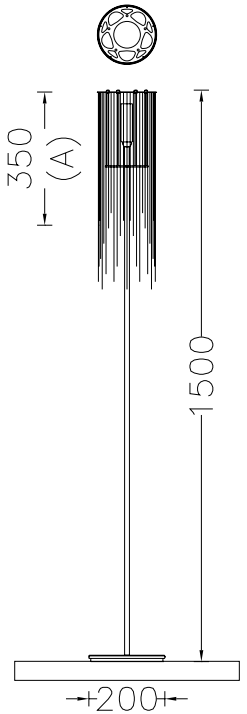

INTERACT

SELECT COLOUR

- SILVER *
- BRASS *
- COPPER *
- SMOKE *
- MIXED METALIC *
- RUST *
- WHITE
- RED
- BLACK

* METALLIC

CUSTOMISE DIMENSIONS

A

LAMP TYPE

QUANTITY

ADDITIONAL COMMENTS

WEB LINK DOWNLOAD

INDEX

CIRCULAR WILLOW | CIRCULAR WILLOW 280 STANDING LAMP | CIR-WIL-280(MED)-STA

DESCRIPTION

A 280mm Dia. simple classic `circular-willow` standing lamp. Made from lasercut stainless steel frames, chrome plated or lacqured, solid brass components and ballchain in several optional finishes. Illuminated by a pyrex glass ball containing a G9-Halogen or LED lamp.

PRODUCT SIZE

SHADE SIZE: 280W X 500-700H MM / TOTAL HEIGHT: 1750MM

PACKAGING DIMENSIONS

400MM(W) X 400MM(L) X 1860MM(H)

LAMP TYPE & NO

1 X G9-HALOGEN 18-40 WATT LAMPS (40W) OR 1X G9-2.5W LEDS. OR 1 X E12/14 // E26/27 LED

CLASS II
IP RATING 20
QC RATING 21

VOLTAGE RANGE
111 - 240V

PRODUCT MARKS & RATINGS

WEIGHT 11KG
PACKED WEIGHT 18KG

TECHNICAL DRAWING

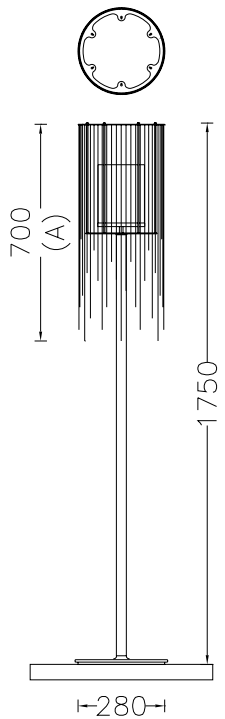

INTERACT

SELECT COLOUR

- SILVER *
- BRASS *
- COPPER *
- SMOKE *
- **MIXED METALIC ***
- RUST *
- WHITE
- RED
- BLACK

* METALLIC

CUSTOMISE DIMENSIONS

A

LAMP TYPE

QUANTITY

ADDITIONAL COMMENTS

WEB LINK **DOWNLOAD**

INDEX

CIRCULAR WILLOW | CIRCULAR WILLOW 400 STANDING LAMP | CIR-WIL-400(LRG)-STA

DESCRIPTION

A 400mm Dia. simple classic `circular-willow` standing lamp. Made from lasercut stainless steel frames, chrome plated or lacqured, solid brass components and ballchain in several optional finishes. Illuminated by a pyrex glass ball containing a G9-Halogen or LED lamp.

PRODUCT SIZE

SHADE SIZE: 400W X 450-700H MM / TOTAL HEIGHT: 1750MM

PACKAGING DIMENSIONS

480MM(W) X 480MM(L) X 1860MM(H)

LAMP TYPE & NO

1 X G9-HALOGEN 18-40 WATT LAMPS (40W) OR 1X G9-2.5W LEDS. OR 1 X E12/14 // E26/27 LED

CLASS II
IP RATING 20
QC RATING 21

VOLTAGE RANGE
111 - 240V

PRODUCT MARKS & RATINGS CE

WEIGHT 14KG
PACKED WEIGHT 24KG

TECHNICAL DRAWING

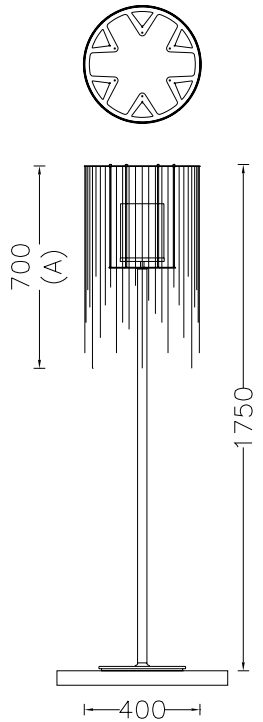

INTERACT

SELECT COLOUR

- SILVER *
- BRASS *
- COPPER *
- SMOKE *
- MIXED METALIC *
- RUST *
- WHITE
- RED
- BLACK

* METALLIC

CUSTOMISE DIMENSIONS

A

LAMP TYPE

QUANTITY

ADDITIONAL COMMENTS

WEB LINK **DOWNLOAD**

INDEX

SIMPLE LAMPS | CIRCULAR WILLOW - WALL SCONCE - 280 | CIR-WIL-280-WS

DESCRIPTION

An addition to our 'Circular Willow' family. This simple elegant wall-sconce based on a metal frame folded in half at 90 degrees. The pattern of the frame above will cast dramatic shadows on the wall above. Illuminated by 1x G9 Halogen/LED bulb within handmade clear or sandblasted pyrex glass ball with OR by 1x E12/14 or E26/E27 vintage style LED bulb.

PRODUCT SIZE

SHADE SIZE: 280 X 180W MM / TOTAL HEIGHT: 700MM

PACKAGING DIMENSIONS

440MM(W) X 440MM(L) X 330MM(H)

LAMP TYPE & NO

1 X G9-HALOGEN 18-40 WATT LAMPS (40W) OR 1X G9-2.5W LEDS. OR 1 X E12/14 OR E26/27 LED

CLASS II
IP RATING 20
QC RATING 21

VOLTAGE RANGE
110-240V

PRODUCT MARKS & RATINGS CE

WEIGHT 2KG
PACKED WEIGHT 5KG

TECHNICAL DRAWING

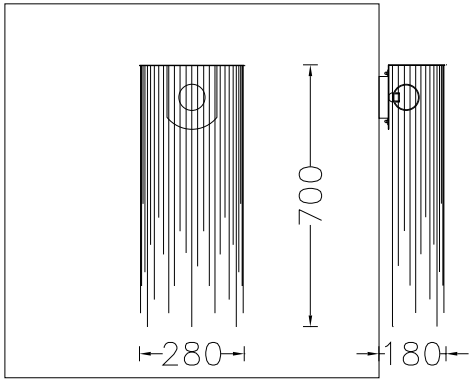

INTERACT

SELECT COLOUR

- SILVER *
- BRASS *
- COPPER *
- SMOKE *
- MIXED METALIC *
- RUST *
- WHITE
- RED
- BLACK

* METALLIC

CUSTOMISE DIMENSIONS

A
B

LAMP TYPE

QUANTITY

ADDITIONAL COMMENTS

WEB LINK DOWNLOAD

INDEX

SIMPLE LAMPS | CIRCULAR WILLOW - WALL SCONCE - 400 | CIR-WIL-400-WS

DESCRIPTION

An addition to our 'Circular Willow' family. This simple elegant wall-sconce based on a metal frame folded in half at 90 degrees. The pattern of the frame above will cast dramatic shadows on the wall above. Illuminated by 1x G9 Halogen/LED bulb within handmade clear or sandblasted pyrex glass ball with OR by 1x E12/14 or E26/E27 vintage style LED bulb.

PRODUCT SIZE

SHADE SIZE: 400 X 225W MM / TOTAL HEIGHT: 200-450MM

PACKAGING DIMENSIONS

330MM(W) X 480MM(L) X 330MM(H)

LAMP TYPE & NO

1 X G9-HALOGEN 18-40 WATT LAMPS (40W) OR 1X G9-2.5W LEDS. OR 1 X E12/14 // E26/27 LED

CLASS II
IP RATING 20
QC RATING 21

VOLTAGE RANGE
110-240V

PRODUCT MARKS & RATINGS CE

WEIGHT 2.5KG

PACKED WEIGHT 6KG

TECHNICAL DRAWING

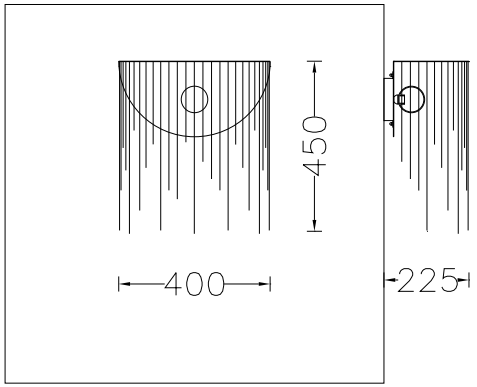

INTERACT

SELECT COLOUR

- SILVER *
- BRASS *
- COPPER *
- SMOKE *
- MIXED METALIC *
- RUST *
- WHITE
- RED
- BLACK

* METALLIC

CUSTOMISE DIMENSIONS

A
B

LAMP TYPE

QUANTITY

ADDITIONAL COMMENTS

WEB LINK DOWNLOAD

INDEX

SIMPLE LAMPS | CIRCULAR WILLOW - WALL LANTERN - 150 | CIR-WIL-150-WL

DESCRIPTION

An addition to our 'Circular Willow' family in the 'Basic Lamps' collection - This simple elegant wall-lantern is identical to its pendant counterpart except it is mounted onto the wall instead of the ceiling. Illuminated by 1x G9 Halogen/LED bulb within handmade frosted pyrex glass diffuser with OR by 1x E12/14 vintage style LED bulb.

PRODUCT SIZE

SHADE SIZE: 150X200W X 520MM / TOTAL HEIGHT: 740MM

PACKAGING DIMENSIONS

310MM(W) X 310MM(L) X 310MM(H)

LAMP TYPE & NO

1 X G9-HALOGEN 18-40 WATT LAMPS (40W) OR 1X G9-2.5W LEDS. OR 1 X E12/14 // E26/27 LED

CLASS II
IP RATING 20
QC RATING 21

VOLTAGE RANGE
110-240V

PRODUCT MARKS & RATINGS CE

WEIGHT 1.3KG
PACKED WEIGHT 4KG

TECHNICAL DRAWING

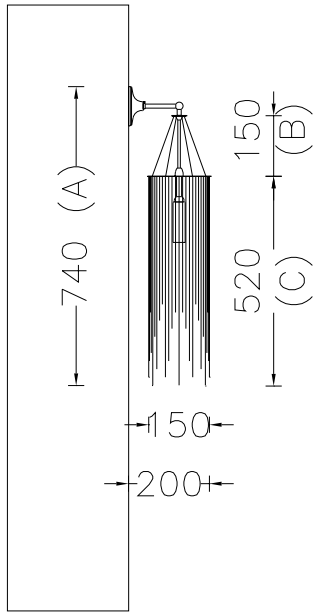

INTERACT

SELECT COLOUR

- SILVER *
- BRASS *
- COPPER *
- SMOKE *
- MIXED METALIC *
- RUST *
- WHITE
- RED
- BLACK

* METALLIC

CUSTOMISE DIMENSIONS

A
B
C

LAMP TYPE

QUANTITY

ADDITIONAL COMMENTS

WEB LINK DOWNLOAD

INDEX

SIMPLE LAMPS | CIRCULAR WILLOW - WALL LANTERN - 280 | CIR-WIL-280-WL

DESCRIPTION

An addition to our 'Circular Willow' family in the 'Basic Lamps' collection - This simple elegant wall-lantern is identical to its pendant counterpart except it is mounted onto the wall instead of the ceiling. Illuminated by 1x G9 Halogen/LED bulb within handmade frosted pyrex glass diffuser with OR by 1x E12/14 vintage style LED bulb.

PRODUCT SIZE

SHADE SIZE: 280X315W X 700MM / TOTAL HEIGHT: 990MM

PACKAGING DIMENSIONS

440MM(W) X 440MM(L) X 330MM(H)

LAMP TYPE & NO

1 X G9-HALOGEN 18-40 WATT LAMPS (40W) OR 1X G9-2.5W LEDS. OR 1 X E12/14 // E26/27 LED

CLASS II
IP RATING 20
QC RATING 21

VOLTAGE RANGE
110-240V

PRODUCT MARKS & RATINGS CE

WEIGHT 3KG

PACKED WEIGHT 7KG

TECHNICAL DRAWING

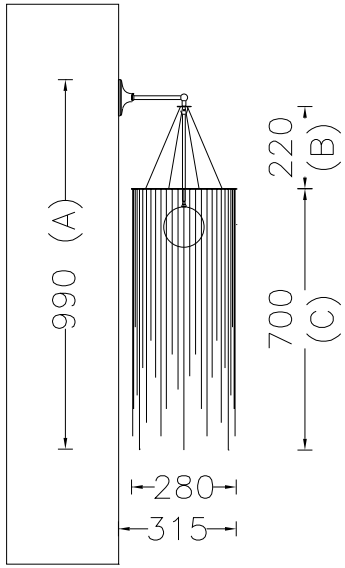

INTERACT

SELECT COLOUR

- SILVER *
- BRASS *
- COPPER *
- SMOKE *
- MIXED METALIC *
- RUST *
- WHITE
- RED
- BLACK

* METALLIC

CUSTOMISE DIMENSIONS

A
B
C

LAMP TYPE

QUANTITY

ADDITIONAL COMMENTS

WEB LINK DOWNLOAD

INDEX

CIRCULAR POD

CIRCULAR POD

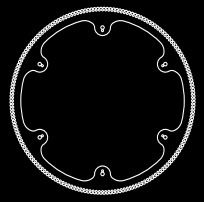

WALL SCONCE

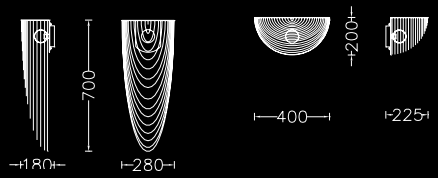

WALL LANTERN

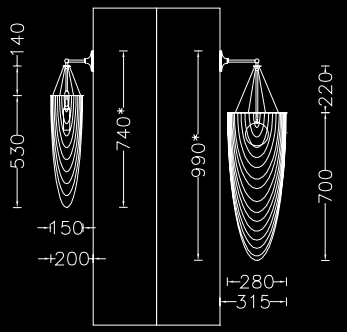

STANDING PENDANT TABLE

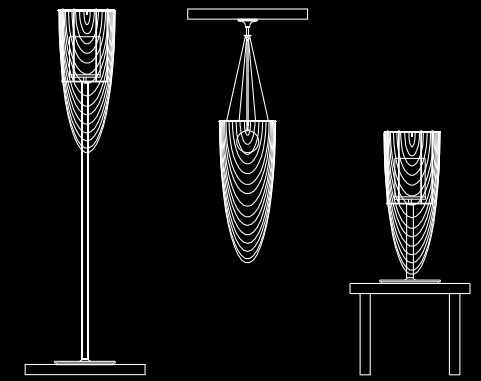

DESCRIPTION

A FAMILY OF SIMPLE CLASSIC CIRCULAR POD-SHAPED PENDANTS, TABLE LAMPS AND STANDING LAMPS. ILLUMINATED BY A PYREX GLASS DIFFUSER CONTAINING A G9-HALOGEN LAMP. AVAILABLE IN THREE DIAMETER SIZES: 150MM, 280MM AND 400MM.

MODEL	SHADE SIZE	TOTAL HEIGHT	
CIRCULAR POD 150 PENDANT LAMP	150W X 350-520H MM	750MM	
CIRCULAR POD 280 PENDANT LAMP	280W X 500-700H MM	1000MM	
CIRCULAR POD 400 PENDANT LAMP	400W X 450-820H MM	900-1250MM	
CIRCULAR POD 150 TABLE LAMP	150W X 350-520H MM	620MM	
CIRCULAR POD 150 STANDING LAMP	150W X 350-520H MM	1500MM	
CIRCULAR POD 280 WALL SCONCE	280 X 180W MM	500-700MM	
CIRCULAR POD 400 WALL SCONCE	400 X 225W MM	200-450MM	
CIRCULAR POD 150 WALL LANTERN	150 X 200W X 350-520MM	740MM	
CIRCULAR POD 280 WALL LANTERN	280 X 315W X 500-700MM	990MM	

CIRCULAR POD | CIRCULAR POD 150 PENDANT LAMP | CIR-POD-150(SML)-PEN

DESCRIPTION

A 150mm Dia. simple classic `circular-pod` pendant lamp. Made from lasercut stainless steel frames, chrome plated or lacqured, solid brass components and ballchain in several optional finishes. Illuminated by a pyrex glass ball containing a G9-Halogen or LED lamp.

PRODUCT SIZE

SHADE SIZE: 150W X 350-520H MM / TOTAL HEIGHT: 750MM

PACKAGING DIMENSIONS

220MM(W) X 220MM(L) X 200MM(H)

LAMP TYPE & NO

1 X G9-HALOGEN 18-40 WATT LAMPS (40W) OR 1X G9-2.5W LEDS. OR 1 X E12/14 // E26/27 LED

CLASS II
IP RATING 20
QC RATING 21

VOLTAGE RANGE
112 - 240V

PRODUCT MARKS & RATINGS

WEIGHT 2KG
PACKED WEIGHT 3KG

TECHNICAL DRAWING

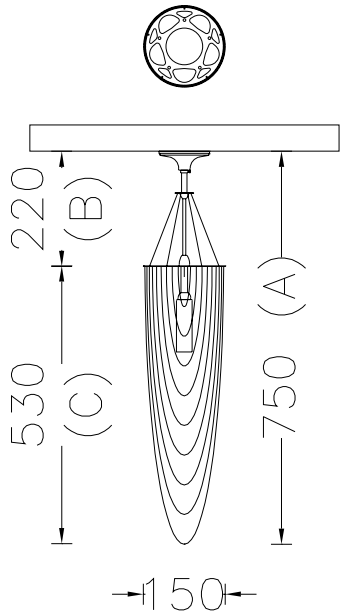

INTERACT

SELECT COLOUR

- SILVER *
- BRASS *
- COPPER *
- SMOKE *
- MIXED METALIC *
- RUST *
- WHITE
- RED
- BLACK

* METALLIC

CUSTOMISE DIMENSIONS

A
B
C

LAMP TYPE

QUANTITY

ADDITIONAL COMMENTS

WEB LINK **DOWNLOAD**

CIRCULAR POD | CIRCULAR POD 280 PENDANT LAMP | CIR-POD-280(MED)-PEN

DESCRIPTION

A 280mm Dia. simple classic `circular-pod` pendant lamp. Made from lasercut stainless steel frames, chrome plated or lacqured, solid brass components and ballchain in several optional finishes. Illuminated by a pyrex glass ball containing a G9-Halogen or LED lamp.

PRODUCT SIZE

SHADE SIZE: 280W X 500-700H MM / TOTAL HEIGHT: 1000MM

PACKAGING DIMENSIONS

460MM(W) X 460MM(L) X 330MM(H)

LAMP TYPE & NO

1 X G9-HALOGEN 18-40 WATT LAMPS (40W) OR 1X G9-2.5W LEDS. OR 1 X E12/14 // E26/27 LED

CLASS II
IP RATING 20
QC RATING 21

VOLTAGE RANGE
112 - 240V

PRODUCT MARKS & RATINGS

WEIGHT 3KG
PACKED WEIGHT 6KG

TECHNICAL DRAWING

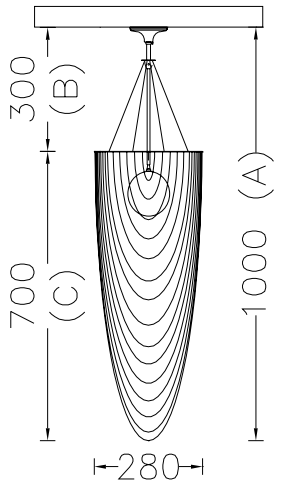

INTERACT

SELECT COLOUR

- SILVER *
- BRASS *
- COPPER *
- SMOKE *
- MIXED METALIC *
- RUST *
- WHITE
- RED
- BLACK

* METALLIC

CUSTOMISE DIMENSIONS

A
B
C

LAMP TYPE

QUANTITY

ADDITIONAL COMMENTS

WEB LINK **DOWNLOAD**

CIRCULAR POD | CIRCULAR POD 400 PENDANT LAMP | CIR-POD-400(LRG)-PEN

DESCRIPTION

A 400mm Dia. simple classic `circular-pod`` pendant lamp. Made from lasercut stainless steel frames, chrome plated or lacqured, solid brass components and ballchain in several optional finishes. Illuminated by a pyrex glass ball containing a G9-Halogen or LED lamp.

PRODUCT SIZE

SHADE SIZE: 400W X 450-820H MM / TOTAL HEIGHT: 900-1250MM

PACKAGING DIMENSIONS

560MM(W) X 560MM(L) X 330MM(H)

LAMP TYPE & NO

1 X G9-HALOGEN 18-40 WATT LAMPS (40W) OR 1X G9-2.5W LEDS. OR 1 X E12/14 // E26/27 LED

CLASS II
IP RATING 20
QC RATING 21

VOLTAGE RANGE
112 - 240V

PRODUCT MARKS & RATINGS

WEIGHT 4KG
PACKED WEIGHT 9KG

TECHNICAL DRAWING

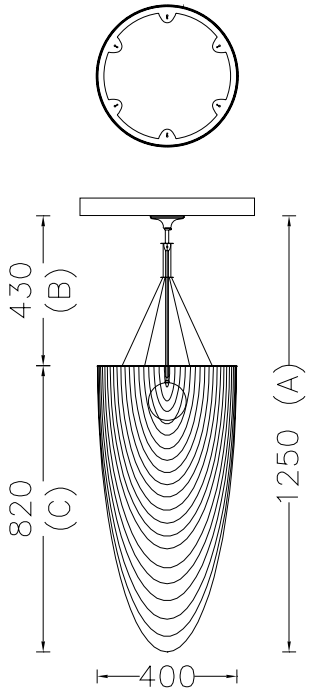

INTERACT

SELECT COLOUR

- SILVER *
- BRASS *
- COPPER *
- SMOKE *
- MIXED METALIC *
- RUST *
- WHITE
- RED
- BLACK

* METALLIC

CUSTOMISE DIMENSIONS

A
B
C

LAMP TYPE

QUANTITY

ADDITIONAL COMMENTS

WEB LINK **DOWNLOAD**

INDEX

CIRCULAR POD | CIRCULAR POD 150 TABLE LAMP | CIR-POD-150(SML)-TBL

DESCRIPTION

A 150mm Dia. simple classic `circular-pod` table lamp. Made from lasercut stainless steel frames, chrome plated or lacqured, solid brass components and ballchain in several optional finishes. Illuminated by a pyrex glass ball containing a G9-Halogen or LED lamp.

PRODUCT SIZE

SHADE SIZE: 150W X 350-520H MM / TOTAL HEIGHT: 620MM

PACKAGING DIMENSIONS

300MM(W) X 300MM(L) X 800MM(H)

LAMP TYPE & NO

1 X G9-HALOGEN 18-40 WATT LAMPS (40W) OR 1X G9-2.5W LED

CLASS II
IP RATING 20
QC RATING 21

VOLTAGE RANGE
112 - 240V

PRODUCT MARKS & RATINGS

WEIGHT 3KG
PACKED WEIGHT 7KG

TECHNICAL DRAWING

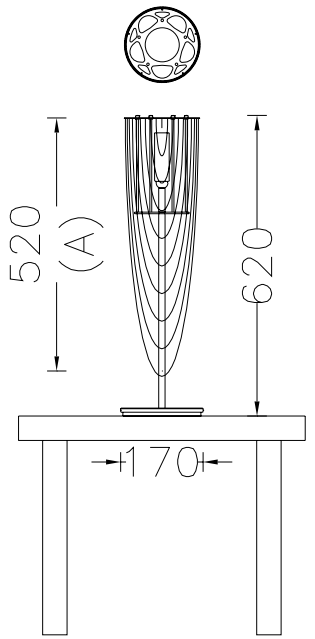

INTERACT

SELECT COLOUR

- SILVER *
- BRASS *
- COPPER *
- SMOKE *
- MIXED METALIC *
- RUST *
- WHITE
- RED
- BLACK

* METALLIC

CUSTOMISE DIMENSIONS

A

LAMP TYPE

QUANTITY

ADDITIONAL COMMENTS

WEB LINK **DOWNLOAD**

INDEX

CIRCULAR POD | CIRCULAR POD 150 STANDING LAMP | CIR-POD-150(SML)-STA

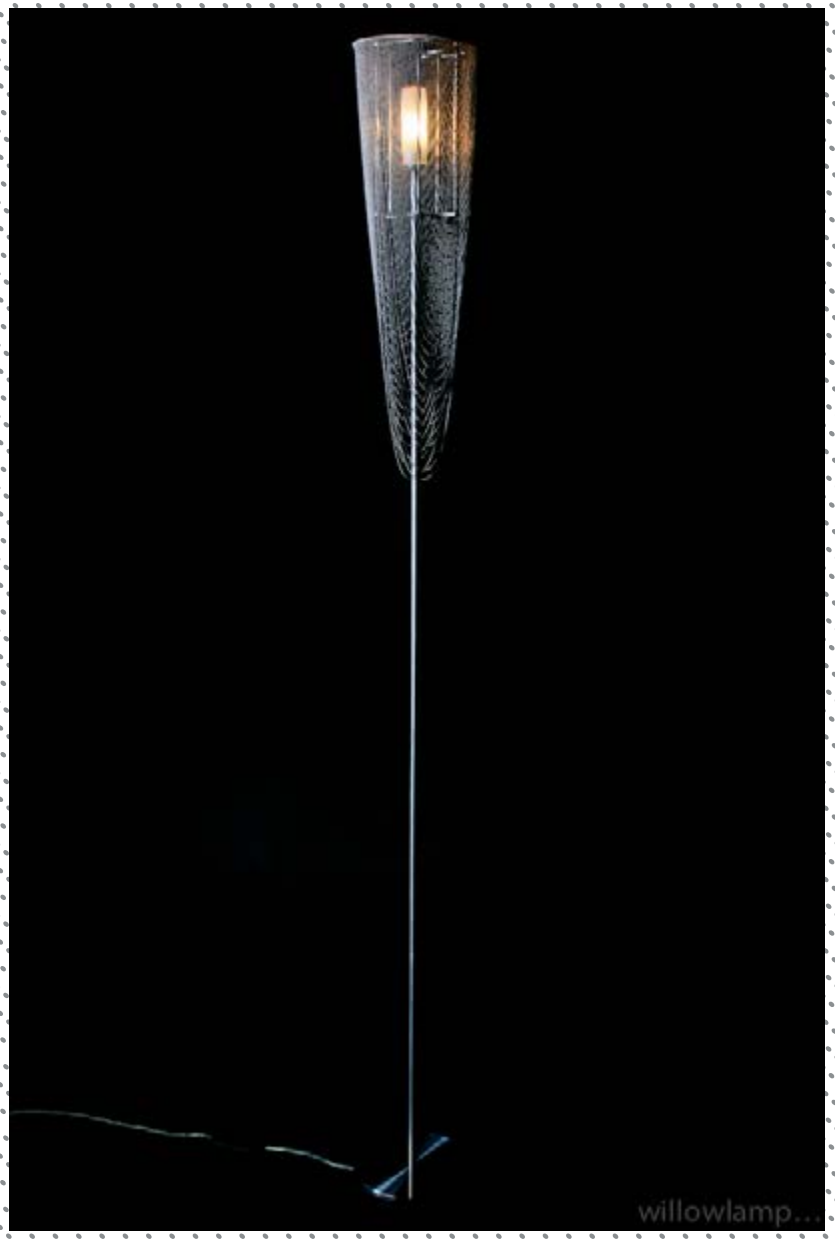

DESCRIPTION

A 400mm Dia. simple classic `circular-pod` standing lamp. Made from lasercut stainless steel frames, chrome plated or lacqured, solid brass components and ballchain in several optional finishes. Illuminated by a pyrex glass ball containing a G9-Halogen or LED lamp.

PRODUCT SIZE

SHADE SIZE: 150W X 350-520H MM / TOTAL HEIGHT: 1500MM

PACKAGING DIMENSIONS

300MM(W) X 300MM(L) X 1680MM(H)

LAMP TYPE & NO

1 X G9-HALOGEN 18-40 WATT LAMPS (40W) OR 1X G9-2.5W LED

CLASS II
IP RATING 20
QC RATING 21

VOLTAGE RANGE
112 - 240V

PRODUCT MARKS & RATINGS CE

WEIGHT 6KG
PACKED WEIGHT 10KG

TECHNICAL DRAWING

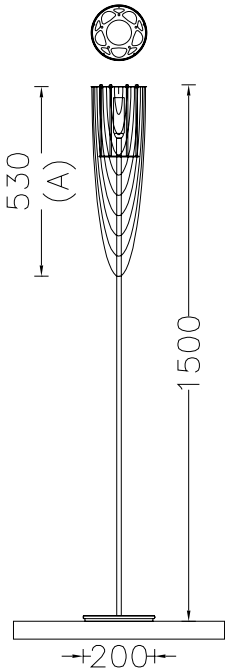

INTERACT

SELECT COLOUR

- SILVER *
- BRASS *
- COPPER *
- SMOKE *
- MIXED METALIC *
- RUST *
- WHITE
- RED
- BLACK

* METALLIC

CUSTOMISE DIMENSIONS

A

LAMP TYPE

QUANTITY

ADDITIONAL COMMENTS

WEB LINK DOWNLOAD

INDEX

SIMPLE LAMPS | CIRCULAR POD - WALL SCONCE - 280 | CIR-POD-280-WS

DESCRIPTION

An addition to our 'Circular Pod' family. This simple elegant wall-sconce based on a metal frame folded in half at 90 degrees. The pattern of the frame above will cast dramatic shadows on the wall above. Illuminated by 1x G9 Halogen/LED bulb within handmade clear or sandblasted pyrex glass ball with OR by 1x E12/14 or E26/E27 vintage style LED bulb.

PRODUCT SIZE

SHADE SIZE: 280 X 180W MM / TOTAL HEIGHT: 700MM

PACKAGING DIMENSIONS

440MM(W) X 440MM(L) X 330MM(H)

LAMP TYPE & NO

1 X G9-HALOGEN 18-40 WATT LAMPS (40W) OR 1X G9-2.5W LEDS. OR 1 X E12/14 // E26/27 LED

CLASS II
IP RATING 20
QC RATING 21

VOLTAGE RANGE
110-240V

PRODUCT MARKS & RATINGS CE

WEIGHT 2KG
PACKED WEIGHT 5KG

TECHNICAL DRAWING

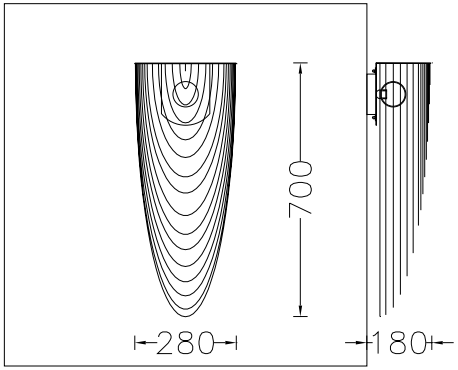

INTERACT

SELECT COLOUR

- SILVER *
- BRASS *
- COPPER *
- SMOKE *
- MIXED METALIC *
- RUST *
- WHITE
- RED
- BLACK

* METALLIC

CUSTOMISE DIMENSIONS

A
B

LAMP TYPE

QUANTITY

ADDITIONAL COMMENTS

WEB LINK DOWNLOAD

INDEX

SIMPLE LAMPS | CIRCULAR POD - WALL SCONCE - 400 | CIR-POD-400-WS

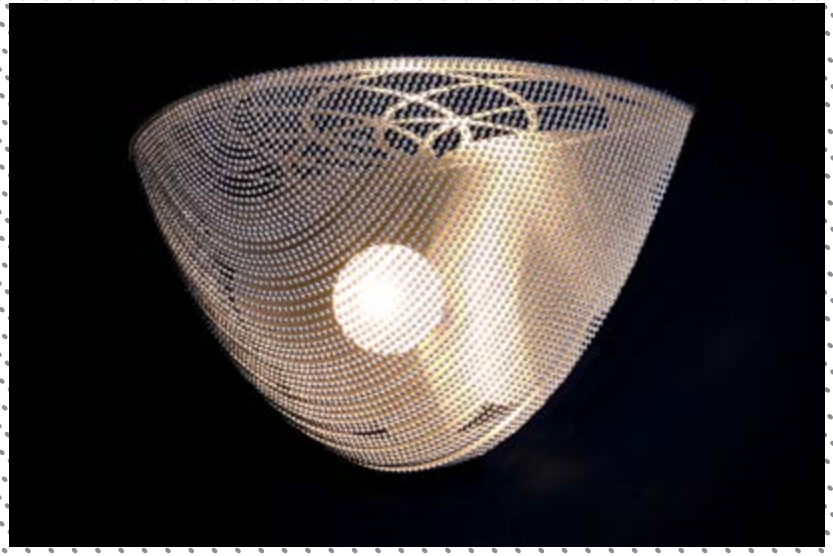

DESCRIPTION

An addition to our 'Circular Pod' family. This simple elegant wall-sconce based on a metal circular frame folded in half at 90 degrees. The pattern of the frame above will cast dramatic shadows on the wall above. Illuminated by 1x G9 Halogen/LED bulb within handmade clear or sandblasted pyrex glass ball with OR by 1x E12/14 or E26/E27 vintage style LED bulb.

PRODUCT SIZE

SHADE SIZE: 400 X 225W MM / TOTAL HEIGHT: 200-450MM

PACKAGING DIMENSIONS

330MM(W) X 480MM(L) X 330MM(H)

LAMP TYPE & NO

1 X G9-HALOGEN 18-40 WATT LAMPS (40W) OR 1X G9-2.5W LEDS. OR 1 X E12/14 // E26/27 LED

CLASS II
IP RATING 20
QC RATING 21

VOLTAGE RANGE
110-240V

PRODUCT MARKS & RATINGS CE

WEIGHT 2.5KG
PACKED WEIGHT 6KG

TECHNICAL DRAWING

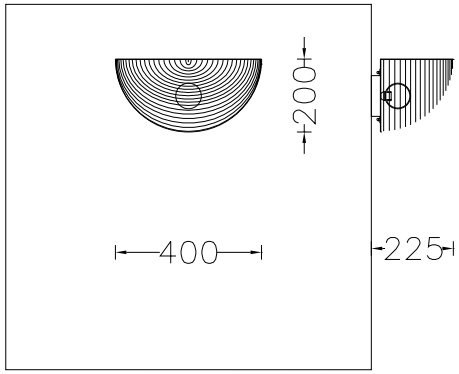

INTERACT

SELECT COLOUR

- SILVER *
- BRASS *
- COPPER *
- SMOKE *
- MIXED METALIC *
- RUST *
- WHITE
- RED
- BLACK

* METALLIC

CUSTOMISE DIMENSIONS

A
B

LAMP TYPE

QUANTITY

ADDITIONAL COMMENTS

WEB LINK DOWNLOAD

INDEX

SIMPLE LAMPS | CIRCULAR POD - WALL LANTERN - 150 | CIR-POD-150-WL

DESCRIPTION

An addition to our 'Circular Pod' family in the 'Basic Lamps' collection - This simple elegant wall-lantern is identical to its pendant counterpart except it is mounted onto the wall instead of the ceiling. Illuminated by 1x G9 Halogen/LED bulb within handmade frosted pyrex glass diffuser with OR by 1x E12/14 vintage style LED bulb.

PRODUCT SIZE

SHADE SIZE: 150X200W X 530MM / TOTAL HEIGHT: 740MM

PACKAGING DIMENSIONS

310MM(W) X 310MM(L) X 310MM(H)

LAMP TYPE & NO

1 X G9-HALOGEN 18-40 WATT LAMPS (40W) OR 1X G9-2.5W LEDS. OR 1 X E12/14 // E26/27 LED

CLASS II
IP RATING 20
QC RATING 21

VOLTAGE RANGE
110-240V

PRODUCT MARKS & RATINGS CE

WEIGHT 1.3KG

PACKED WEIGHT 4KG

TECHNICAL DRAWING

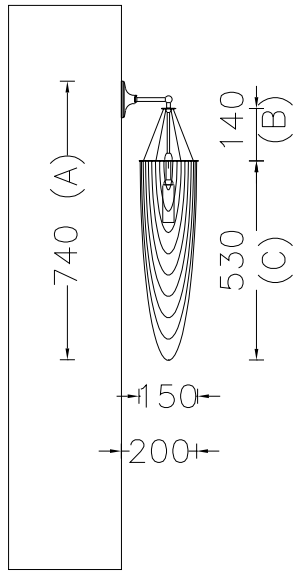

INTERACT

SELECT COLOUR

- SILVER *
- BRASS *
- COPPER *
- SMOKE *
- MIXED METALIC *
- RUST *
- WHITE
- RED
- BLACK

* METALLIC

CUSTOMISE DIMENSIONS

A
B

LAMP TYPE

QUANTITY

ADDITIONAL COMMENTS

WEB LINK DOWNLOAD

INDEX

SIMPLE LAMPS | CIRCULAR POD - WALL LANTERN - 280 | CIR-POD-280-WL

DESCRIPTION

An addition to our 'Circular Pod' family in the 'Basic Lamps' collection - This simple elegant wall-lantern is identical to its pendant counterpart except it is mounted onto the wall instead of the ceiling. Illuminated by 1x G9 Halogen/LED bulb within handmade frosted pyrex glass diffuser with OR by 1x E12/14 vintage style LED bulb.

PRODUCT SIZE

SHADE SIZE: 280X315W X 700MM / TOTAL HEIGHT: 990MM

PACKAGING DIMENSIONS

440MM(W) X 440MM(L) X 330MM(H)

LAMP TYPE & NO

1 X G9-HALOGEN 18-40 WATT LAMPS (40W) OR 1X G9-2.5W LEDS. OR 1 X E12/14 // E26/27 LED

CLASS II
IP RATING 20
QC RATING 21

VOLTAGE RANGE
110-240V

PRODUCT MARKS & RATINGS CE

WEIGHT 3KG
PACKED WEIGHT 7KG

TECHNICAL DRAWING

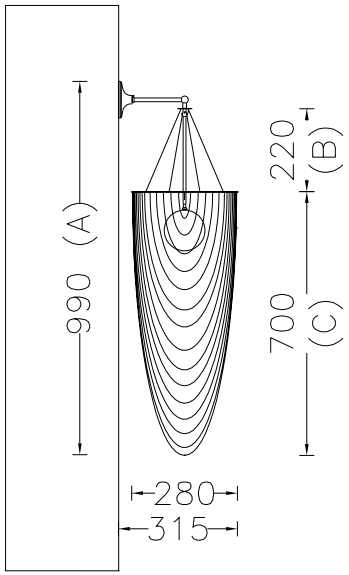

INTERACT

SELECT COLOUR

- SILVER *
- BRASS *
- COPPER *
- SMOKE *
- MIXED METALIC *
- RUST *
- WHITE
- RED
- BLACK

* METALLIC

CUSTOMISE DIMENSIONS

A
B
C

LAMP TYPE

QUANTITY

ADDITIONAL COMMENTS

WEB LINK DOWNLOAD

INDEX

SCALLOPED CROPPED

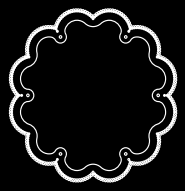

WALL SCONCE

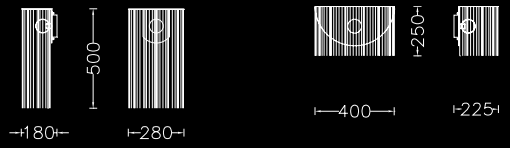

WALL LANTERN

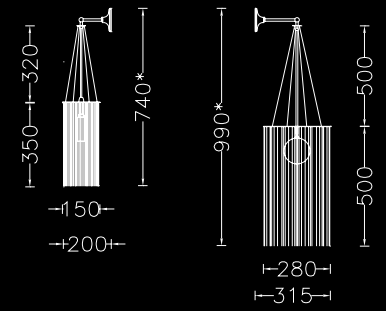

STANDING PENDANT TABLE

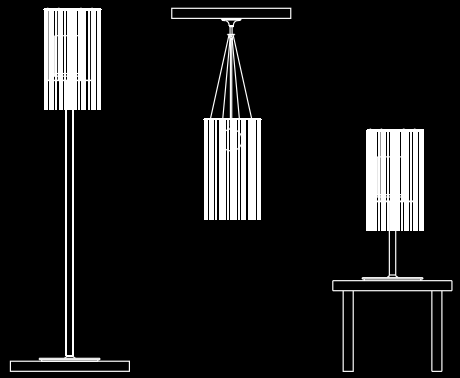

SCALLOPED CROPPED

DESCRIPTION

A FAMILY OF SIMPLE CLASSIC SCALLOPED CROPPED, DRUM-SHAPED PENDANTS, TABLE LAMPS AND STANDING LAMPS. ILLUMINATED BY A PYREX GLASS DIFFUSER CONTAINING A G9-HALOGEN LAMP. AVAILABLE IN THREE DIAMETER SIZES: 150MM, 280MM AND 400MM.

MODEL	SHADE SIZE	TOTAL HEIGHT
SCALLOPED CROPPED 150 PENDANT LAMP	150W X 350-520H MM	750MM
SCALLOPED CROPPED 280 PENDANT LAMP	280W X 500-700H MM	1000MM
SCALLOPED CROPPED 400 PENDANT LAMP	400W X 450-820H MM	900-1250MM
SCALLOPED CROPPED 150 TABLE LAMP	150W X 350-520H MM	620MM
SCALLOPED CROPPED 280 TABLE LAMP	280W X 500-700H MM	750MM
SCALLOPED CROPPED 400 TABLE LAMP	400W X 450-700H MM	750MM
SCALLOPED CROPPED 150 STANDING LAMP	150W X 350-520H MM	1500MM
SCALLOPED CROPPED 280 STANDING LAMP	280W X 500-700H MM	1750MM
SCALLOPED CROPPED 400 STANDING LAMP	400W X 450-700H MM	1750MM
SCALLOPED CROPPED 280 WALL SCONCE	280 X 180W MM	500-700MM
SCALLOPED CROPPED 400 WALL SCONCE	400 X 225W MM	200-450MM
SCALLOPED CROPPED 150 WALL LANTERN	150 X 200W X 350-520MM	740MM
SCALLOPED CROPPED 280 WALL LANTERN	280 X 315W X 500-700MM	990MM

SCALLOP CROPPED | SCALLOP CROPPED 150 PENDANT LAMP | SCA-CRO-150(SML)-PEN

DESCRIPTION

A 150mm Dia. simple classic `scalloped-cropped` pendant lamp. Made from lasercut stainless steel frames, chrome plated or lacqured, solid brass components and ballchain in several optional finishes. Illuminated by a pyrex glass ball containing a G9-Halogen or LED lamp.

PRODUCT SIZE

SHADE SIZE: 150W X 350-520H MM / TOTAL HEIGHT: 750MM

PACKAGING DIMENSIONS

220MM(W) X 220MM(L) X 200MM(H)

LAMP TYPE & NO

1 X G9-HALOGEN 18-40 WATT LAMPS (40W) OR 1X G9-2.5W LEDS. OR 1 X E12/14 // E26/27 LED

CLASS II
IP RATING 20
QC RATING 21

VOLTAGE RANGE
113 - 240V

PRODUCT MARKS & RATINGS

WEIGHT 2KG
PACKED WEIGHT 3KG

TECHNICAL DRAWING

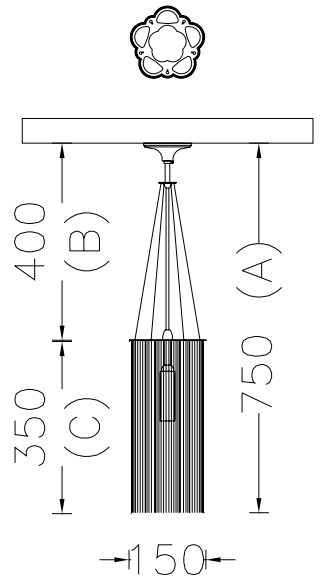

INTERACT

SELECT COLOUR

- SILVER *
- BRASS *
- COPPER *
- SMOKE *
- MIXED METALIC *
- RUST *
- WHITE
- RED
- BLACK

* METALLIC

CUSTOMISE DIMENSIONS

A
B
C

LAMP TYPE

QUANTITY

ADDITIONAL COMMENTS

WEB LINK DOWNLOAD

INDEX

SCALLOP CROPPED | SCALLOP CROPPED 280 PENDANT LAMP | SCA-CRO-280(MED)-PEN

DESCRIPTION

A 280mm Dia. simple classic `scalloped-cropped` pendant lamp. Made from lasercut stainless steel frames, chrome plated or lacqured, solid brass components and ballchain in several optional finishes. Illuminated by a pyrex glass ball containing a G9-Halogen or LED lamp.

PRODUCT SIZE

SHADE SIZE: 280W X 500-700H MM / TOTAL HEIGHT: 1000MM

PACKAGING DIMENSIONS

460MM(W) X 460MM(L) X 330MM(H)

LAMP TYPE & NO

1 X G9-HALOGEN 18-40 WATT LAMPS (40W) OR 1X G9-2.5W LEDS. OR 1 X E12/14 // E26/27 LED

CLASS II
IP RATING 20
QC RATING 21

VOLTAGE RANGE
113 - 240V

PRODUCT MARKS & RATINGS

WEIGHT 3KG
PACKED WEIGHT 6KG

TECHNICAL DRAWING

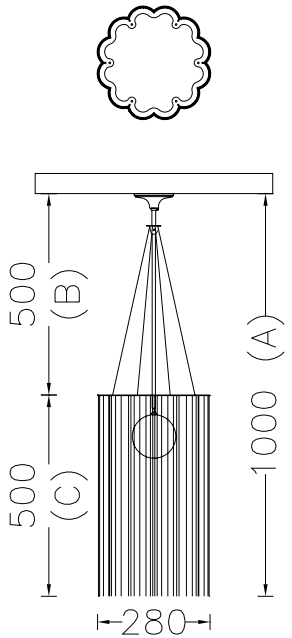

INTERACT

SELECT COLOUR

- SILVER *
- BRASS *
- COPPER *
- SMOKE *
- MIXED METALIC *
- RUST *
- WHITE
- RED
- BLACK

* METALLIC

CUSTOMISE DIMENSIONS

A
B
C

LAMP TYPE

QUANTITY

ADDITIONAL COMMENTS

WEB LINK DOWNLOAD

INDEX

SCALLOP CROPPED | SCALLOP CROPPED 400 PENDANT LAMP | SCA-CRO-400(LRG)-PEN

DESCRIPTION

A 400mm Dia. simple classic `scalloped-cropped` pendant lamp. Made from lasercut stainless steel frames, chrome plated or lacqured, solid brass components and ballchain in several optional finishes. Illuminated by a pyrex glass ball containing a G9-Halogen or LED lamp.

PRODUCT SIZE

SHADE SIZE: 400W X 450-820H MM / TOTAL HEIGHT: 900-1250MM

PACKAGING DIMENSIONS

560MM(W) X 560MM(L) X 330MM(H)

LAMP TYPE & NO

1 X G9-HALOGEN 18-40 WATT LAMPS (40W) OR 1X G9-2.5W LEDS. OR 1 X E12/14 // E26/27 LED

CLASS II
IP RATING 20
QC RATING 21

VOLTAGE RANGE
113 - 240V

PRODUCT MARKS & RATINGS

WEIGHT 4KG
PACKED WEIGHT 9KG

TECHNICAL DRAWING

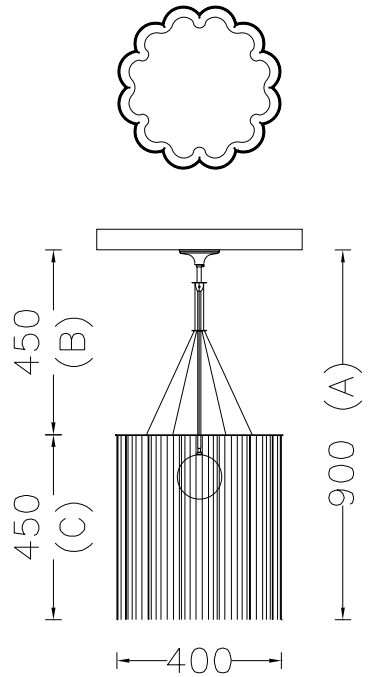

INTERACT

SELECT COLOUR

- SILVER *
- BRASS *
- COPPER *
- SMOKE *
- MIXED METALIC *
- RUST *
- WHITE
- RED
- BLACK

* METALLIC

CUSTOMISE DIMENSIONS

A
B
C

LAMP TYPE

QUANTITY

ADDITIONAL COMMENTS

WEB LINK **DOWNLOAD**

INDEX

SCALLOP CROPPED | SCALLOP CROPPED 150 TABLE LAMP | SCA-CRO-150(SML)-TBL

DESCRIPTION

A 150mm Dia. simple classic `scalloped-cropped` table lamp. Made from lasercut stainless steel frames, chrome plated or lacqured, solid brass components and ballchain in several optional finishes. Illuminated by a pyrex glass ball containing a G9-Halogen or LED lamp.

PRODUCT SIZE

SHADE SIZE: 150W X 350-520H MM / TOTAL HEIGHT: 620MM

PACKAGING DIMENSIONS

300MM(W) X 300MM(L) X 800MM(H)

LAMP TYPE & NO

1 X G9-HALOGEN 18-40 WATT LAMPS (40W) OR 1X G9-2.5W LED

CLASS II
IP RATING 20
QC RATING 21

VOLTAGE RANGE
113 - 240V

PRODUCT MARKS & RATINGS

WEIGHT 3KG
PACKED WEIGHT 7KG

TECHNICAL DRAWING

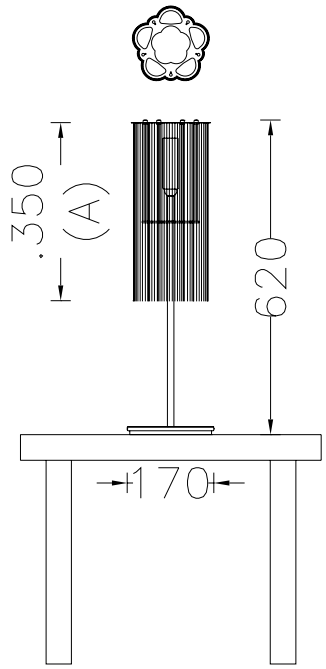

INTERACT

SELECT COLOUR

- SILVER *
- BRASS *
- COPPER *
- SMOKE *
- MIXED METALIC *
- RUST *
- WHITE
- RED
- BLACK

* METALLIC

CUSTOMISE DIMENSIONS

A

LAMP TYPE

QUANTITY

ADDITIONAL COMMENTS

WEB LINK DOWNLOAD

INDEX

SCALLOP CROPPED | SCALLOP CROPPED 280 TABLE LAMP | SCA-CRO-280(MED)-TBL

DESCRIPTION

A 280mm Dia. simple classic `scalloped-cropped` table lamp. Made from lasercut stainless steel frames, chrome plated or lacqured, solid brass components and ballchain in several optional finishes. Illuminated by a pyrex glass ball containing a G9-Halogen or LED lamp.

PRODUCT SIZE

SHADE SIZE: 280W X 500-700H MM / TOTAL HEIGHT: 750MM

PACKAGING DIMENSIONS

400MM(W) X 400MM(L) X 870MM(H)

LAMP TYPE & NO

1 X G9-HALOGEN 18-40 WATT LAMPS (40W) OR 1X G9-2.5W LEDS. OR 1 X E12/14 // E26/27 LED

CLASS II
IP RATING 20
QC RATING 21

VOLTAGE RANGE
112 - 240V

PRODUCT MARKS & RATINGS CE

WEIGHT 9KG
PACKED WEIGHT 14KG

TECHNICAL DRAWING

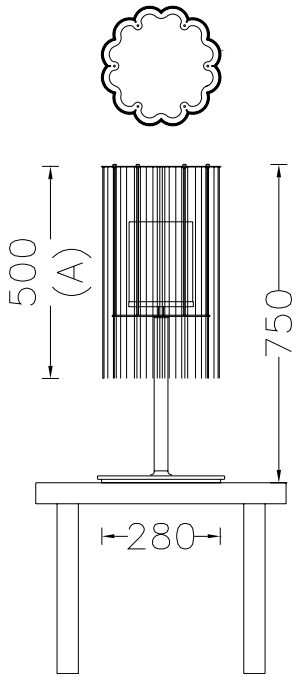

INTERACT

SELECT COLOUR

- SILVER *
- BRASS *
- COPPER *
- SMOKE *
- MIXED METALIC *
- RUST *
- WHITE
- RED
- BLACK

* METALLIC

CUSTOMISE DIMENSIONS

A

LAMP TYPE

QUANTITY

ADDITIONAL COMMENTS

WEB LINK DOWNLOAD

INDEX

SCALLOP CROPPED | SCALLOP CROPPED 400 TABLE LAMP | SCA-CRO-400(LRG)-TBL

DESCRIPTION

A 400mm Dia. simple classic `scalloped-cropped` table lamp. Made from lasercut stainless steel frames, chrome plated or lacqured, solid brass components and ballchain in several optional finishes. Illuminated by a pyrex glass ball containing a G9-Halogen or LED lamp.

PRODUCT SIZE

SHADE SIZE: 400W X 450-700H MM / TOTAL HEIGHT: 750MM

PACKAGING DIMENSIONS

480MM(W) X 480MM(L) X 870MM(H)

LAMP TYPE & NO

1 X G9-HALOGEN 18-40 WATT LAMPS (40W) OR 1X G9-2.5W LEDS. OR 1 X E12/14 // E26/27 LED

CLASS II
IP RATING 20
QC RATING 21

VOLTAGE RANGE
112 - 240V

PRODUCT MARKS & RATINGS CE

WEIGHT 10KG
PACKED WEIGHT 15KG

TECHNICAL DRAWING

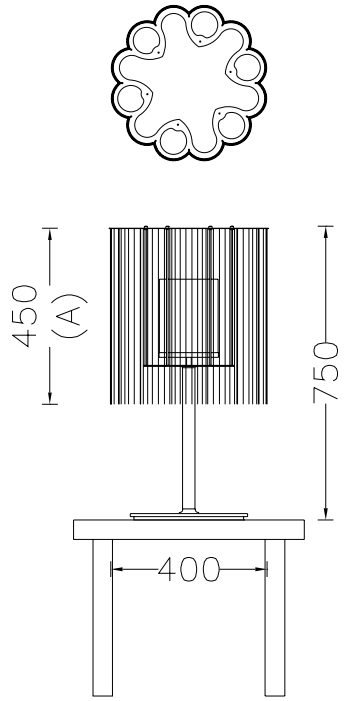

INTERACT

SELECT COLOUR

- SILVER *
- BRASS *
- COPPER *
- SMOKE *
- MIXED METALIC *
- RUST *
- WHITE
- RED
- BLACK

* METALLIC

CUSTOMISE DIMENSIONS

A

LAMP TYPE

QUANTITY

ADDITIONAL COMMENTS

WEB LINK DOWNLOAD

INDEX

SCALLOP CROPPED | SCALLOP CROPPED 150 STANDING LAMP | SCA-CRO-150(SML)-STA

DESCRIPTION

A 150mm Dia. simple classic `scalloped-cropped` standing lamp. Made from lasercut stainless steel frames, chrome plated or lacqured, solid brass components and ballchain in several optional finishes. Illuminated by a pyrex glass ball containing a G9-Halogen or LED lamp.

PRODUCT SIZE

SHADE SIZE: 150W X 350-520H MM / TOTAL HEIGHT: 1500MM

PACKAGING DIMENSIONS

300MM(W) X 300MM(L) X 1680MM(H)

LAMP TYPE & NO

1 X G9-HALOGEN 18-40 WATT LAMPS (40W) OR 1X G9-2.5W LED

CLASS II
IP RATING 20
QC RATING 21

VOLTAGE RANGE
113 - 240V

PRODUCT MARKS & RATINGS

WEIGHT 6KG

PACKED WEIGHT 10KG

TECHNICAL DRAWING

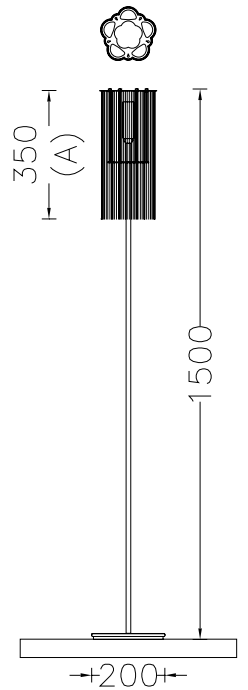

INTERACT

SELECT COLOUR

- SILVER *
- BRASS *
- COPPER *
- SMOKE *
- MIXED METALIC *
- RUST *
- WHITE
- RED
- BLACK

* METALLIC

CUSTOMISE DIMENSIONS

A

LAMP TYPE

QUANTITY

ADDITIONAL COMMENTS

WEB LINK **DOWNLOAD**

INDEX

SCALLOP CROPPED | SCALLOP CROPPED 280 STANDING LAMP | SCA-CRO-280(MED)-STA

DESCRIPTION

A 280mm Dia. simple classic `scalloped-cropped` standing lamp. Made from lasercut stainless steel frames, chrome plated or lacqured, solid brass components and ballchain in several optional finishes. Illuminated by a pyrex glass ball containing a G9-Halogen or LED lamp.

PRODUCT SIZE

SHADE SIZE: 280W X 500-700H MM / TOTAL HEIGHT: 1750MM

PACKAGING DIMENSIONS

400MM(W) X 400MM(L) X 1860MM(H)

LAMP TYPE & NO

1 X G9-HALOGEN 18-40 WATT LAMPS (40W) OR 1X G9-2.5W LEDS. OR 1 X E12/14 // E26/27 LED

CLASS II
IP RATING 20
QC RATING 21

VOLTAGE RANGE
112 - 240V

PRODUCT MARKS & RATINGS CE

WEIGHT 11KG
PACKED WEIGHT 18KG

TECHNICAL DRAWING

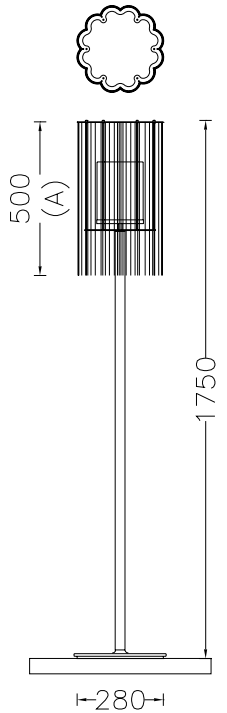

INTERACT

SELECT COLOUR

- SILVER *
- BRASS *
- COPPER *
- SMOKE *
- MIXED METALIC *
- RUST *
- WHITE
- RED
- BLACK

* METALLIC

CUSTOMISE DIMENSIONS

A

LAMP TYPE

QUANTITY

ADDITIONAL COMMENTS

WEB LINK DOWNLOAD

INDEX

SCALLOP CROPPED | SCALLOP CROPPED 400 STANDING LAMP | SCA-CRO-400(LRG)-STA

DESCRIPTION

A 400mm Dia. simple classic `scalloped-cropped` standing lamp. Made from lasercut stainless steel frames, chrome plated or lacqured, solid brass components and ballchain in several optional finishes. Illuminated by a pyrex glass ball containing a G9-Halogen or LED lamp.

PRODUCT SIZE

SHADE SIZE: 400W X 450-700H MM / TOTAL HEIGHT: 1750MM

PACKAGING DIMENSIONS

480MM(W) X 480MM(L) X 1860MM(H)

LAMP TYPE & NO

1 X G9-HALOGEN 18-40 WATT LAMPS (40W) OR 1X G9-2.5W LEDS. OR 1 X E12/14 // E26/27 LED

CLASS II
IP RATING 20
QC RATING 21

VOLTAGE RANGE
112 - 240V

PRODUCT MARKS & RATINGS CE

WEIGHT 14KG

PACKED WEIGHT 24KG

TECHNICAL DRAWING

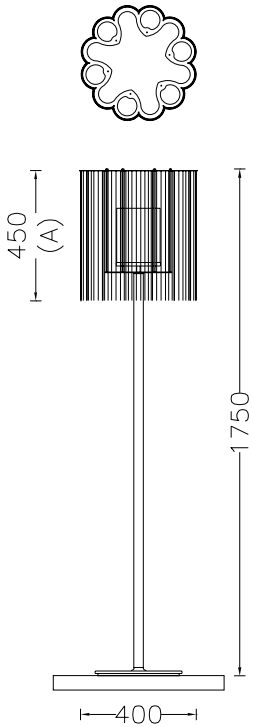

INTERACT

SELECT COLOUR

- SILVER *
- BRASS *
- COPPER *
- SMOKE *
- MIXED METALIC *
- RUST *
- WHITE
- RED
- BLACK

* METALLIC

CUSTOMISE DIMENSIONS

A

LAMP TYPE

QUANTITY

ADDITIONAL COMMENTS

WEB LINK **DOWNLOAD**

INDEX

SIMPLE LAMPS | SCALLOPED CROPPED - WALL SCONCE - 280 | SCA-CRO-280-WS

DESCRIPTION

An addition to our 'Scalloped Cropped' family. This simple elegant wall-sconce based on a metal frame folded in half at 90 degrees. The pattern of the frame above will cast dramatic shadows on the wall above. Illuminated by 1x G9 Halogen/LED bulb within handmade clear or sandblasted pyrex glass ball with OR by 1x E12/14 or E26/E27 vintage style LED bulb.

PRODUCT SIZE

SHADE SIZE: 280 X 180W MM / TOTAL HEIGHT: 500MM

PACKAGING DIMENSIONS

440MM(W) X 440MM(L) X 330MM(H)

LAMP TYPE & NO

1 X G9-HALOGEN 18-40 WATT LAMPS (40W) OR 1X G9-2.5W LEDS. OR 1 X E12/14 // E26/27 LED

CLASS II
IP RATING 20
QC RATING 21

VOLTAGE RANGE
110-240V

PRODUCT MARKS & RATINGS CE

WEIGHT 2KG
PACKED WEIGHT 5KG

TECHNICAL DRAWING

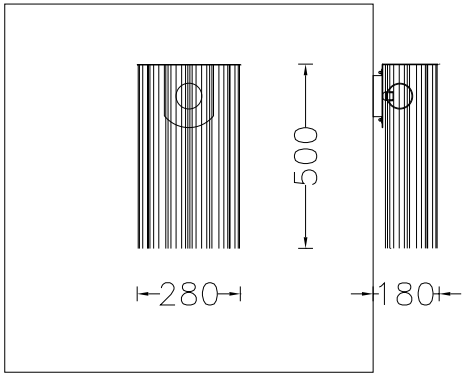

INTERACT

SELECT COLOUR

- SILVER *
- BRASS *
- COPPER *
- SMOKE *
- MIXED METALIC *
- RUST *
- WHITE
- RED
- BLACK

* METALLIC

CUSTOMISE DIMENSIONS

A
B

LAMP TYPE

QUANTITY

ADDITIONAL COMMENTS

WEB LINK DOWNLOAD

INDEX

SIMPLE LAMPS | SCALLOPED CROPPED - WALL SCONCE - 400 | SCA-CRO-400-WS

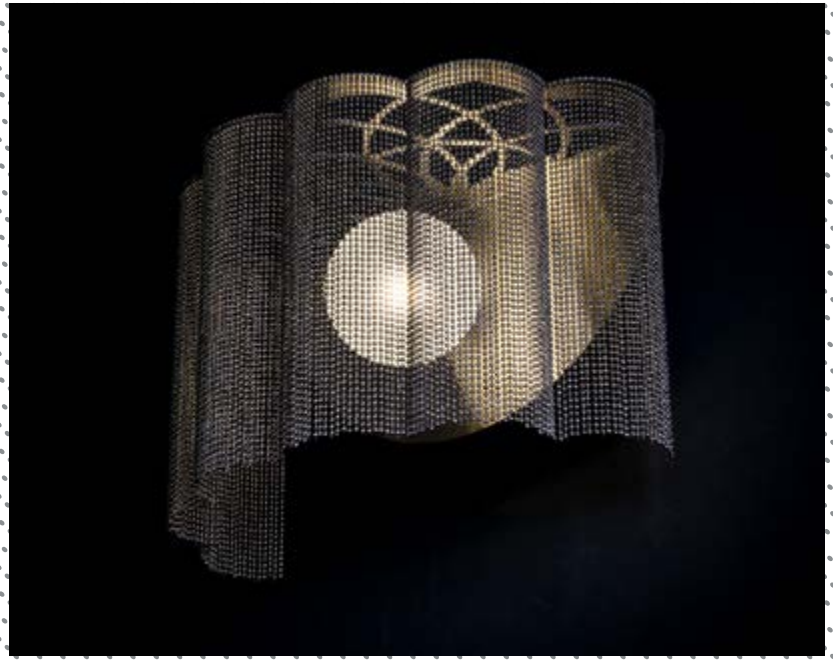

DESCRIPTION

An addition to our 'Scalloped Cropped' family. This simple elegant wall-sconce based on a circle folded in half at 90 degrees. The pattern of the frame above will cast dramatic shadows on the wall and ceiling above. Illuminated by 1x G9 Halogen/LED bulb within handmade clear or sandblasted pyrex glass ball with OR by 1x E12/14 or E26/E27 vintage style LED bulb.

PRODUCT SIZE

SHADE SIZE: 400 X 225W MM / TOTAL HEIGHT: 250MM

PACKAGING DIMENSIONS

330MM(W) X 480MM(L) X 330MM(H)

LAMP TYPE & NO

1 X G9-HALOGEN 18-40 WATT LAMPS (40W) OR 1X G9-2.5W LEDS. OR 1 X E12/14 // E26/27 LED

CLASS II
IP RATING 20
QC RATING 21

VOLTAGE RANGE
110-240V

PRODUCT MARKS & RATINGS CE

WEIGHT 2.5KG

PACKED WEIGHT 6KG

TECHNICAL DRAWING

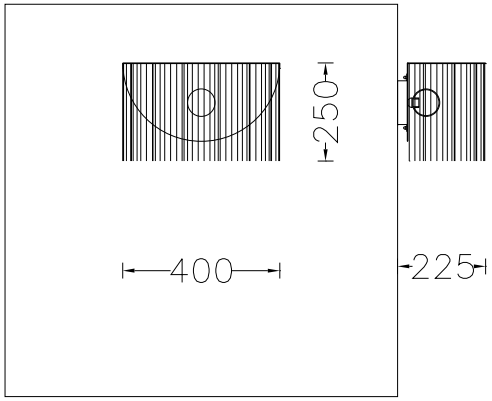

INTERACT

SELECT COLOUR

- SILVER *
- BRASS *
- COPPER *
- SMOKE *
- MIXED METALIC *
- RUST *
- WHITE
- RED
- BLACK

* METALLIC

CUSTOMISE DIMENSIONS

A
B

LAMP TYPE

QUANTITY

ADDITIONAL COMMENTS

WEB LINK DOWNLOAD

INDEX

SIMPLE LAMPS | SCALLOPED CROPPED - WALL LANTERN - 150 | SCA-CRO-150-WL

DESCRIPTION

An addition to our 'Scalloped Cropped' family in the 'Basic Lamps' collection - This simple elegant wall-lantern is identical to its pendant counterpart except it is mounted onto the wall instead of the ceiling. Illuminated by 1x G9 Halogen/LED bulb within handmade frosted pyrex glass diffuser with OR by 1x E12/14 vintage style LED bulb.

PRODUCT SIZE

SHADE SIZE: 150X200W X 350MM / TOTAL HEIGHT: 740MM

PACKAGING DIMENSIONS

310MM(W) X 310MM(L) X 310MM(H)

LAMP TYPE & NO

1 X G9-HALOGEN 18-40 WATT LAMPS (40W) OR 1X G9-2.5W LEDS. OR 1 X E12/14 // E26/27 LED

CLASS II
IP RATING 20
QC RATING 21

VOLTAGE RANGE
110-240V

PRODUCT MARKS & RATINGS CE

WEIGHT 1.3KG
PACKED WEIGHT 4KG

TECHNICAL DRAWING

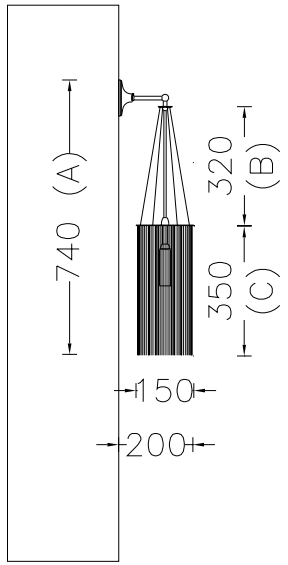

INTERACT

SELECT COLOUR

- SILVER *
- BRASS *
- COPPER *
- SMOKE *
- MIXED METALIC *
- RUST *
- WHITE
- RED
- BLACK

* METALLIC

CUSTOMISE DIMENSIONS

A
B
C

LAMP TYPE

QUANTITY

ADDITIONAL COMMENTS

WEB LINK DOWNLOAD

SIMPLE LAMPS | SCALLOPED CROPPED - WALL LANTERN - 280 | SCA-CRO-280-WL

DESCRIPTION

An addition to our 'Scalloped Cropped' family in the 'Basic Lamps' collection - This simple elegant wall-lantern is identical to its pendant counterpart except it is mounted onto the wall instead of the ceiling. Illuminated by 1x G9 Halogen/LED bulb within handmade frosted pyrex glass diffuser with OR by 1x E12/14 vintage style LED bulb.

PRODUCT SIZE

SHADE SIZE: 280X315W X 500MM / TOTAL HEIGHT: 990MM

PACKAGING DIMENSIONS

460MM(W) X 460MM(L) X 330MM(H)

LAMP TYPE & NO

1 X G9-HALOGEN 18-40 WATT LAMPS (40W) OR 1X G9-2.5W LEDS. OR 1 X E12/14 // E26/27 LED

CLASS II
IP RATING 20
QC RATING 21

VOLTAGE RANGE
110-240V

PRODUCT MARKS & RATINGS CE

WEIGHT 3KG
PACKED WEIGHT 7KG

TECHNICAL DRAWING

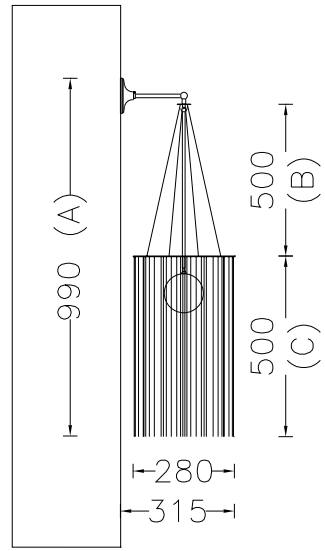

INTERACT

SELECT COLOUR

- SILVER *
- BRASS *
- COPPER *
- SMOKE *
- MIXED METALIC *
- RUST *
- WHITE
- RED
- BLACK

* METALLIC

CUSTOMISE DIMENSIONS

A
B
C

LAMP TYPE

QUANTITY

ADDITIONAL COMMENTS

WEB LINK DOWNLOAD

INDEX

SCALLOPED WILLOW

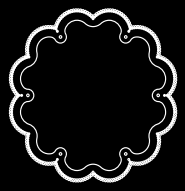

WALL SCONCE

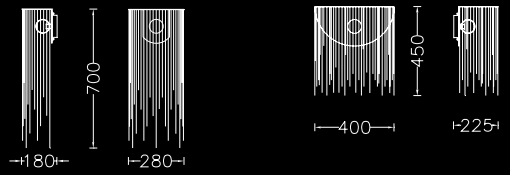

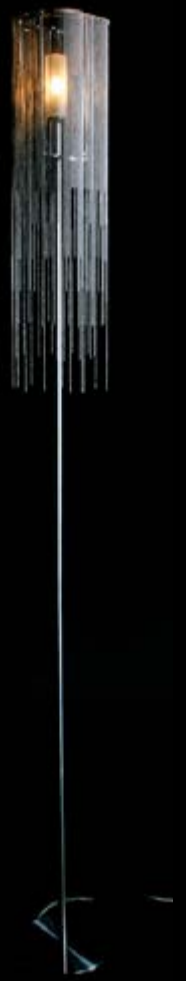

WALL LANTERN

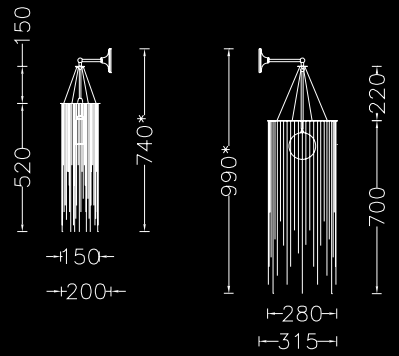

STANDING PENDANT TABLE

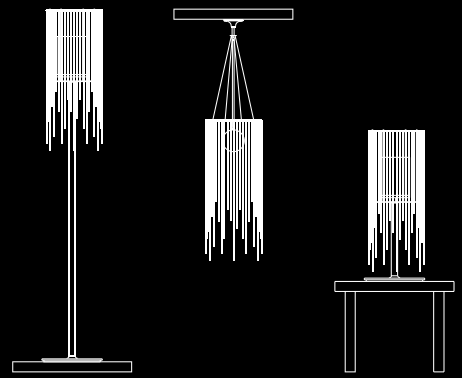

SCALLOPED WILLOW

DESCRIPTION

A FAMILY OF SIMPLE CLASSIC SCALLOPED WILLOW PENDANTS, TABLE LAMPS AND STANDING LAMPS, WITH WILLOWLAMP'S DISTINCTIVE FEATHERED EDGE DETAIL, WHICH WE CALL 'WILLOW'. ILLUMINATED BY A PYREX GLASS DIFFUSER CONTAINING A G9-HALOGEN LAMP. AVAILABLE IN THREE DIAMETER SIZES: 150MM, 280MM AND 400MM.

MODEL	SHADE SIZE	TOTAL HEIGHT	
SCALLOPED WILLOW 150 PENDANT LAMP	150W X 350-520H MM	750MM	
SCALLOPED WILLOW 280 PENDANT LAMP	280W X 500-700H MM	1000MM	
SCALLOPED WILLOW 400 PENDANT LAMP	400W X 450-820H MM	900-1250MM	
SCALLOPED WILLOW 150 TABLE LAMP	150W X 350-520H MM	620MM	
SCALLOPED WILLOW 280 TABLE LAMP	280W X 500-700H MM	750MM	
SCALLOPED WILLOW 400 TABLE LAMP	400W X 450-700H MM	750MM	
SCALLOPED WILLOW 150 STANDING LAMP	150W X 350-520H MM	1500MM	
SCALLOPED WILLOW 280 STANDING LAMP	280W X 500-700H MM	1750MM	
SCALLOPED WILLOW 400 STANDING LAMP	400W X 450-700H MM	1750MM	
SCALLOPED WILLOW 280 WALL SCONCE	280 X 180W MM	500-700MM	
SCALLOPED WILLOW 400 WALL SCONCE	400 X 225W MM	200-450MM	
SCALLOPED WILLOW 150 WALL LANTERN	150 X 200W X 350-520MM	740MM	
SCALLOPED WILLOW 280 WALL LANTERN	280 X 315W X 500-700MM	990MM	

SCALLOP WILLOW | SCALLOP WILLOW 150 PENDANT LAMP | SCA-WIL-150(SML)-PEN

DESCRIPTION

A 150mm Dia. simple classic `scalloped-willow` pendant lamp. Made from lasercut stainless steel frames, chrome plated or lacqured, solid brass components and ballchain in several optional finishes. Illuminated by a pyrex glass ball containing a G9-Halogen or LED lamp.

PRODUCT SIZE

SHADE SIZE: 150W X 350-520H MM / TOTAL HEIGHT: 750MM

PACKAGING DIMENSIONS

220MM(W) X 220MM(L) X 200MM(H)

LAMP TYPE & NO

1 X G9-HALOGEN 18-40 WATT LAMPS (40W) OR 1X G9-2.5W LEDS. OR 1 X E12/14 // E26/27 LED

CLASS II
IP RATING 20
QC RATING 21

VOLTAGE RANGE
114 - 240V

PRODUCT MARKS & RATINGS

WEIGHT 2KG
PACKED WEIGHT 3KG

TECHNICAL DRAWING

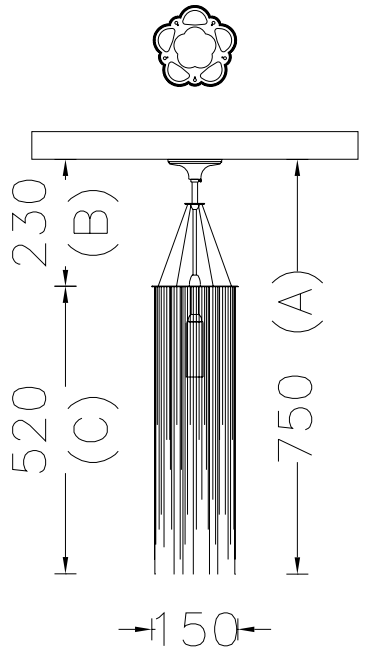

INTERACT

SELECT COLOUR

- SILVER *
- BRASS *
- COPPER *
- SMOKE *
- MIXED METALIC *
- RUST *
- WHITE
- RED
- BLACK

* METALLIC

CUSTOMISE DIMENSIONS

A
B
C

LAMP TYPE

QUANTITY

ADDITIONAL COMMENTS

WEB LINK **DOWNLOAD**

INDEX

SCALLOP WILLOW | SCALLOP WILLOW 280 PENDANT LAMP | SCA-WIL-280(MED)-PEN

DESCRIPTION

A 280mm Dia. simple classic `scalloped-willow` pendant lamp. Made from lasercut stainless steel frames, chrome plated or lacqured, solid brass components and ballchain in several optional finishes. Illuminated by a pyrex glass ball containing a G9-Halogen or LED lamp.

PRODUCT SIZE

SHADE SIZE: 280W X 500-700H MM / TOTAL HEIGHT: 1000MM

PACKAGING DIMENSIONS

460MM(W) X 460MM(L) X 330MM(H)

LAMP TYPE & NO

1 X G9-HALOGEN 18-40 WATT LAMPS (40W) OR 1X G9-2.5W LEDS. OR 1 X E12/14 // E26/27 LED

CLASS II
IP RATING 20
QC RATING 21

VOLTAGE RANGE
114 - 240V

PRODUCT MARKS & RATINGS

WEIGHT 3KG

PACKED WEIGHT 6KG

TECHNICAL DRAWING

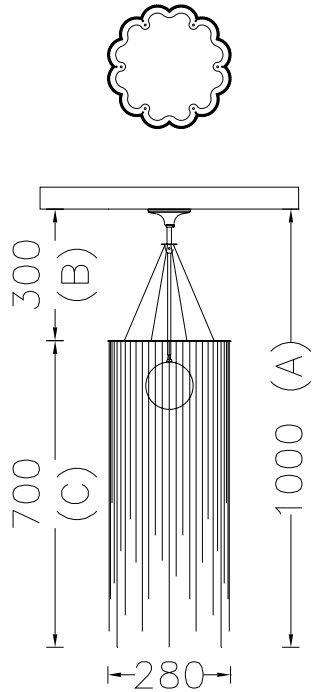

INTERACT

SELECT COLOUR

- SILVER *
- BRASS *
- COPPER *
- SMOKE *
- MIXED METALIC *
- RUST *
- WHITE
- RED
- BLACK

* METALLIC

CUSTOMISE DIMENSIONS

A
B
C

LAMP TYPE

QUANTITY

ADDITIONAL COMMENTS

WEB LINK **DOWNLOAD**

INDEX

SCALLOP WILLOW | SCALLOP WILLOW 400 PENDANT LAMP | SCA-WIL-400(LRG)-PEN

DESCRIPTION

A 400mm Dia. simple classic `scalloped-willow` pendant lamp. Made from lasercut stainless steel frames, chrome plated or lacqured, solid brass components and ballchain in several optional finishes. Illuminated by a pyrex glass ball containing a G9-Halogen or LED lamp.

PRODUCT SIZE

SHADE SIZE: 400W X 450-820H MM / TOTAL HEIGHT: 900-1250MM

PACKAGING DIMENSIONS

560MM(W) X 560MM(L) X 330MM(H)

LAMP TYPE & NO

1 X G9-HALOGEN 18-40 WATT LAMPS (40W) OR 1X G9-2.5W LEDS. OR 1 X E12/14 // E26/27 LED

CLASS II
IP RATING 20
QC RATING 21

VOLTAGE RANGE
114 - 240V

PRODUCT MARKS & RATINGS

WEIGHT 4KG

PACKED WEIGHT 9KG

TECHNICAL DRAWING

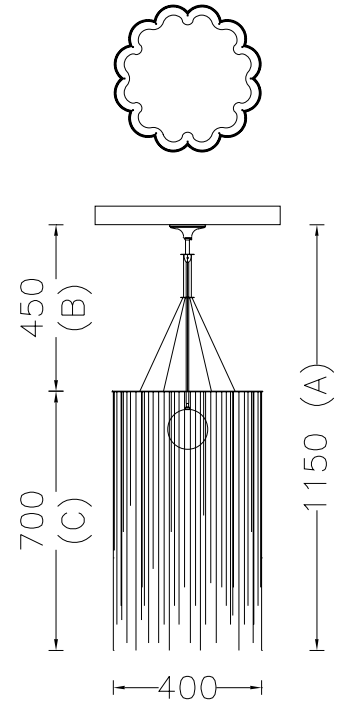

INTERACT

SELECT COLOUR

- SILVER *
- BRASS *
- COPPER *
- SMOKE *
- MIXED METALIC *
- RUST *
- WHITE
- RED
- BLACK

* METALLIC

CUSTOMISE DIMENSIONS

A
B
C

LAMP TYPE

QUANTITY

ADDITIONAL COMMENTS

WEB LINK **DOWNLOAD**

INDEX

SCALLOP WILLOW | SCALLOP WILLOW 150 TABLE LAMP | SCA-WIL-150(SML)-TBL

DESCRIPTION

A 150mm Dia. simple classic `scalloped-willow` table lamp. Made from lasercut stainless steel frames, chrome plated or lacqured, solid brass components and ballchain in several optional finishes. Illuminated by a pyrex glass ball containing a G9-Halogen or LED lamp.

PRODUCT SIZE

SHADE SIZE: 150W X 350-520H MM / TOTAL HEIGHT: 620MM

PACKAGING DIMENSIONS

300MM(W) X 300MM(L) X 800MM(H)

LAMP TYPE & NO

1 X G9-HALOGEN 18-40 WATT LAMPS (40W) OR 1X G9-2.5W LED

CLASS II
IP RATING 20
QC RATING 21

VOLTAGE RANGE
114 - 240V

PRODUCT MARKS & RATINGS CE

WEIGHT 3KG

PACKED WEIGHT 7KG

TECHNICAL DRAWING

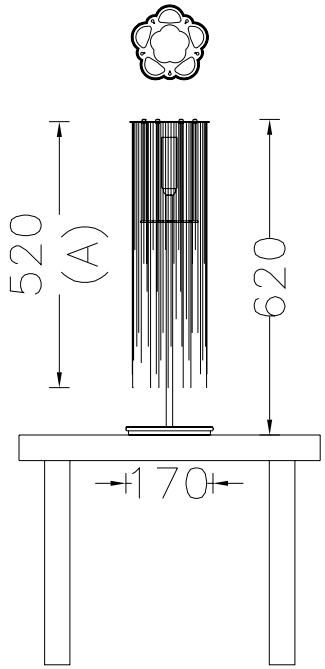

INTERACT

SELECT COLOUR

- SILVER *
- BRASS *
- COPPER *
- SMOKE *
- MIXED METALIC *
- RUST *
- WHITE
- RED
- BLACK

* METALLIC

CUSTOMISE DIMENSIONS

A

LAMP TYPE

QUANTITY

ADDITIONAL COMMENTS

WEB LINK DOWNLOAD

INDEX

SCALLOP WILLOW | SCALLOP WILLOW 280 TABLE LAMP | SCA-WIL-280(MED)-TBL

DESCRIPTION

A 280mm Dia. simple classic `scalloped-willow` table lamp. Made from lasercut stainless steel frames, chrome plated or lacqured, solid brass components and ballchain in several optional finishes. Illuminated by a pyrex glass ball containing a G9-Halogen or LED lamp.

PRODUCT SIZE

SHADE SIZE: 280W X 500-700H MM / TOTAL HEIGHT: 750MM

PACKAGING DIMENSIONS

400MM(W) X 400MM(L) X 870MM(H)

LAMP TYPE & NO

1 X G9-HALOGEN 18-40 WATT LAMPS (40W) OR 1X G9-2.5W LEDS. OR 1 X E12/14 // E26/27 LED

CLASS II
IP RATING 20
QC RATING 21

VOLTAGE RANGE
113 - 240V

PRODUCT MARKS & RATINGS CE

WEIGHT 9KG
PACKED WEIGHT 14KG

TECHNICAL DRAWING

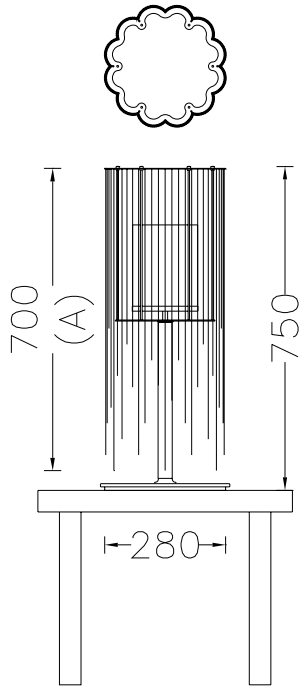

INTERACT

SELECT COLOUR

- SILVER *
- BRASS *
- COPPER *
- SMOKE *
- MIXED METALIC *
- RUST *
- WHITE
- RED
- BLACK

* METALLIC

CUSTOMISE DIMENSIONS

A

LAMP TYPE

QUANTITY

ADDITIONAL COMMENTS

WEB LINK **DOWNLOAD**

INDEX

SCALLOP WILLOW | SCALLOP WILLOW 400 TABLE LAMP | SCA-WIL-400(LRG)-TBL

DESCRIPTION

A 400mm Dia. simple classic `scalloped-willow` table lamp. Made from lasercut stainless steel frames, chrome plated or lacqured, solid brass components and ballchain in several optional finishes. Illuminated by a pyrex glass ball containing a G9-Halogen or LED lamp.

PRODUCT SIZE

SHADE SIZE: 400W X 450-700H MM / TOTAL HEIGHT: 750MM

PACKAGING DIMENSIONS

480MM(W) X 480MM(L) X 870MM(H)

LAMP TYPE & NO

1 X G9-HALOGEN 18-40 WATT LAMPS (40W) OR 1X G9-2.5W LEDS. OR 1 X E12/14 // E26/27 LED

CLASS II
IP RATING 20
QC RATING 21

VOLTAGE RANGE
113 - 240V

PRODUCT MARKS & RATINGS CE

WEIGHT 10KG
PACKED WEIGHT 15KG

TECHNICAL DRAWING

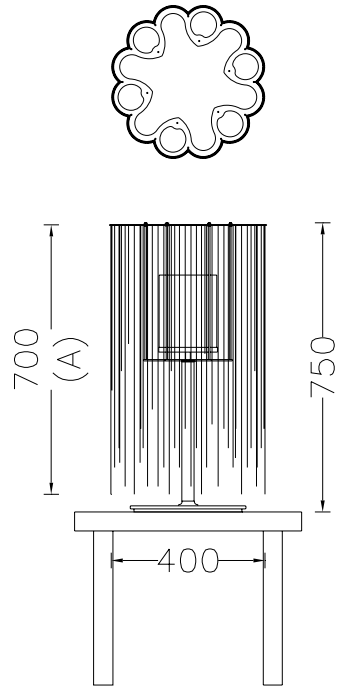

INTERACT

SELECT COLOUR

- SILVER *
- BRASS *
- COPPER *
- SMOKE *
- MIXED METALIC *
- RUST *
- WHITE
- RED
- BLACK

* METALLIC

CUSTOMISE DIMENSIONS

A

LAMP TYPE

QUANTITY

ADDITIONAL COMMENTS

WEB LINK **DOWNLOAD**

INDEX

SCALLOP WILLOW | SCALLOP WILLOW 150 STANDING LAMP | SCA-WIL-150(SML)-STA

DESCRIPTION

A 150mm Dia. simple classic `scalloped-willow` standing lamp. Made from lasercut stainless steel frames, chrome plated or lacqured, solid brass components and ballchain in several optional finishes. Illuminated by a pyrex glass ball containing a G9-Halogen or LED lamp.

PRODUCT SIZE

SHADE SIZE: 150W X 350-520H MM / TOTAL HEIGHT: 1500MM

PACKAGING DIMENSIONS

300MM(W) X 300MM(L) X 1680MM(H)

LAMP TYPE & NO

1 X G9-HALOGEN 18-40 WATT LAMPS (40W) OR 1X G9-2.5W LED

CLASS II
IP RATING 20
QC RATING 21

VOLTAGE RANGE
114 - 240V

PRODUCT MARKS & RATINGS

WEIGHT 6KG

PACKED WEIGHT 10KG

TECHNICAL DRAWING

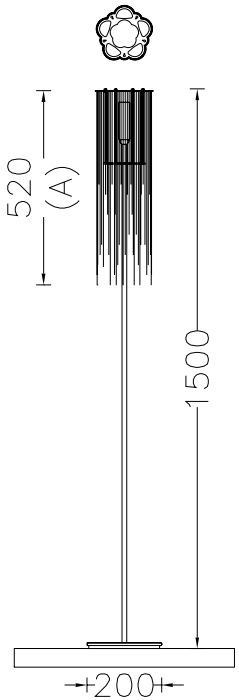

INTERACT

SELECT COLOUR

- SILVER *
- BRASS *
- COPPER *
- SMOKE *
- **MIXED METALIC ***
- RUST *
- WHITE
- RED
- BLACK

* METALLIC

CUSTOMISE DIMENSIONS

A

LAMP TYPE

QUANTITY

ADDITIONAL COMMENTS

WEB LINK **DOWNLOAD**

INDEX
257

SCALLOP WILLOW | SCALLOP WILLOW 280 STANDING LAMP | SCA-WIL-280(MED)-STA

DESCRIPTION

A 280mm Dia. simple classic `scalloped-willow` standing lamp. Made from lasercut stainless steel frames, chrome plated or lacqured, solid brass components and ballchain in several optional finishes. Illuminated by a pyrex glass ball containing a G9-Halogen or LED lamp.

PRODUCT SIZE

SHADE SIZE: 280W X 500-700H MM / TOTAL HEIGHT: 1750MM

PACKAGING DIMENSIONS

400MM(W) X 400MM(L) X 1860MM(H)

LAMP TYPE & NO

1 X G9-HALOGEN 18-40 WATT LAMPS (40W) OR 1X G9-2.5W LEDS. OR 1 X E12/14 // E26/27 LED

CLASS II
IP RATING 20
QC RATING 21

VOLTAGE RANGE
113 - 240V

PRODUCT MARKS & RATINGS

WEIGHT 11KG
PACKED WEIGHT 18KG

TECHNICAL DRAWING

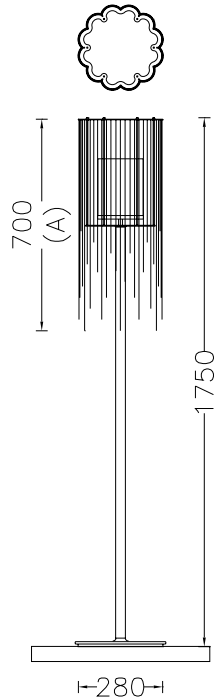

INTERACT

SELECT COLOUR

- SILVER *
- BRASS *
- COPPER *
- SMOKE *
- MIXED METALIC *
- RUST *
- WHITE
- RED
- BLACK

* METALLIC

CUSTOMISE DIMENSIONS

A

LAMP TYPE

QUANTITY

ADDITIONAL COMMENTS

WEB LINK **DOWNLOAD**

INDEX

SCALLOP WILLOW | SCALLOP WILLOW 400 STANDING LAMP | SCA-WIL-400(LRG)-STA

DESCRIPTION

A 400mm Dia. simple classic `scalloped-willow` standing lamp. Made from lasercut stainless steel frames, chrome plated or lacqured, solid brass components and ballchain in several optional finishes. Illuminated by a pyrex glass ball containing a G9-Halogen or LED lamp.

PRODUCT SIZE

SHADE SIZE: 400W X 450-700H MM / TOTAL HEIGHT: 1750MM

PACKAGING DIMENSIONS

480MM(W) X 480MM(L) X 1860MM(H)

LAMP TYPE & NO

1 X G9-HALOGEN 18-40 WATT LAMPS (40W) OR 1X G9-2.5W LEDS. OR 1 X E12/14 // E26/27 LED

CLASS II
IP RATING 20
QC RATING 21

VOLTAGE RANGE
113 - 240V

PRODUCT MARKS & RATINGS CE

WEIGHT 14KG
PACKED WEIGHT 24KG

TECHNICAL DRAWING

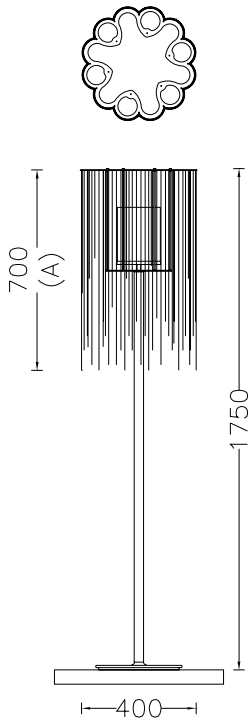

INTERACT

SELECT COLOUR

- SILVER *
- BRASS *
- COPPER *
- SMOKE *
- MIXED METALIC *
- RUST *
- WHITE
- RED
- BLACK

* METALLIC

CUSTOMISE DIMENSIONS

A

LAMP TYPE

QUANTITY

ADDITIONAL COMMENTS

WEB LINK DOWNLOAD

INDEX

SIMPLE LAMPS | SCALLOPED WILLOW - WALL SCONCE - 280 | SCA-WIL-280-WS

DESCRIPTION

An addition to our 'Scalloped Willow' family. This simple elegant wall-sconce based on a metal frame folded in half at 90 degrees. The pattern of the frame above will cast dramatic shadows on the wall above. Illuminated by 1x G9 Halogen/LED bulb within handmade clear or sandblasted pyrex glass ball with OR by 1x E12/14 or E26/E27 vintage style LED bulb.

PRODUCT SIZE

SHADE SIZE: 280 X 180W MM / TOTAL HEIGHT: 700MM

PACKAGING DIMENSIONS

440MM(W) X 440MM(L) X 330MM(H)

LAMP TYPE & NO

1 X G9-HALOGEN 18-40 WATT LAMPS (40W) OR 1X G9-2.5W LEDS. OR 1 X E12/14 // E26/27 LED

CLASS II
IP RATING 20
QC RATING 21

VOLTAGE RANGE
110-240V

PRODUCT MARKS & RATINGS CE

WEIGHT 2KG
PACKED WEIGHT 5KG

TECHNICAL DRAWING

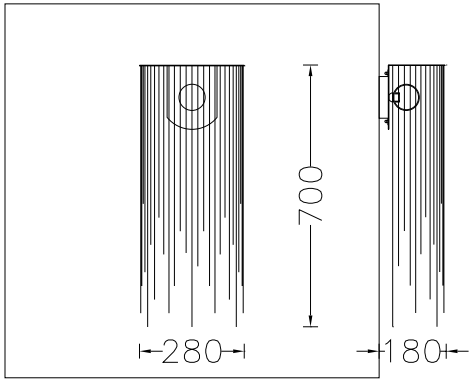

INTERACT

SELECT COLOUR

- SILVER *
- BRASS *
- COPPER *
- SMOKE *
- MIXED METALIC *
- RUST *
- WHITE
- RED
- BLACK

* METALLIC

CUSTOMISE DIMENSIONS

A
B

LAMP TYPE

QUANTITY

ADDITIONAL COMMENTS

WEB LINK DOWNLOAD

INDEX

SIMPLE LAMPS | SCALLOPED WILLOW - WALL SCONCE - 400 | SCA-WIL-400-WS

DESCRIPTION

An addition to our 'Scalloped Willow' family. This simple elegant wall-sconce based on a metal frame folded in half at 90 degrees. The pattern of the frame above will cast dramatic shadows on the wall above. Illuminated by 1x G9 Halogen/LED bulb within handmade clear or sandblasted pyrex glass ball with OR by 1x E12/14 or E26/E27 vintage style LED bulb.

PRODUCT SIZE

SHADE SIZE: 400 X 225W MM / TOTAL HEIGHT: 200-450MM

PACKAGING DIMENSIONS

330MM(W) X 480MM(L) X 330MM(H)

LAMP TYPE & NO

1 X G9-HALOGEN 18-40 WATT LAMPS (40W) OR 1X G9-2.5W LEDS. OR 1 X E12/14 // E26/27 LED

CLASS II
IP RATING 20
QC RATING 21

VOLTAGE RANGE
110-240V

PRODUCT MARKS & RATINGS CE

WEIGHT 2.5KG

PACKED WEIGHT 6KG

TECHNICAL DRAWING

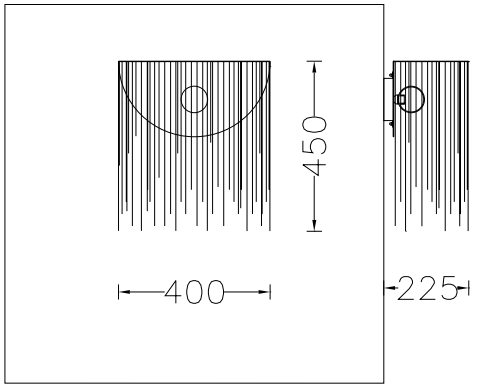

INTERACT

SELECT COLOUR

- SILVER *
- BRASS *
- COPPER *
- SMOKE *
- MIXED METALIC *
- RUST *
- WHITE
- RED
- BLACK

* METALLIC

CUSTOMISE DIMENSIONS

A
B

LAMP TYPE

QUANTITY

ADDITIONAL COMMENTS

WEB LINK DOWNLOAD

INDEX

SIMPLE LAMPS | SCALLOPED WILLOW - WALL LANTERN - 150 | SCA-WIL-150-WL

DESCRIPTION

An addition to our 'Scalloped Willow' family in the 'Basic Lamps' collection - This simple elegant wall-lantern is identical to its pendant counterpart except it is mounted onto the wall instead of the ceiling. Illuminated by 1x G9 Halogen/LED bulb within handmade frosted pyrex glass diffuser with OR by 1x E12/14 vintage style LED bulb.

PRODUCT SIZE

SHADE SIZE: 150X200W X 520MM / TOTAL HEIGHT: 740MM

PACKAGING DIMENSIONS

310MM(W) X 310MM(L) X 310MM(H)

LAMP TYPE & NO

1 X G9-HALOGEN 18-40 WATT LAMPS (40W) OR 1X G9-2.5W LEDS. OR 1 X E12/14 // E26/27 LED

CLASS II
IP RATING 20
QC RATING 21

VOLTAGE RANGE
110-240V

PRODUCT MARKS & RATINGS CE

WEIGHT 1.3KG
PACKED WEIGHT 4KG

TECHNICAL DRAWING

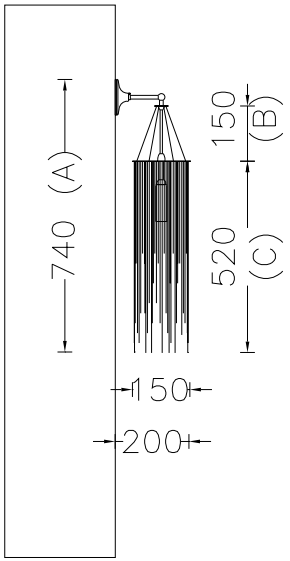

INTERACT

SELECT COLOUR

- SILVER *
- BRASS *
- COPPER *
- SMOKE *
- MIXED METALIC *
- RUST *
- WHITE
- RED
- BLACK

* METALLIC

CUSTOMISE DIMENSIONS

A
B
C

LAMP TYPE

QUANTITY

ADDITIONAL COMMENTS

WEB LINK DOWNLOAD

INDEX

SIMPLE LAMPS | SCALLOPED WILLOW - WALL LANTERN - 280 | SCA-WIL-280-WL

DESCRIPTION

An addition to our 'Scalloped Willow' family in the 'Basic Lamps' collection - This simple elegant wall-lantern is identical to its pendant counterpart except it is mounted onto the wall instead of the ceiling. Illuminated by 1x G9 Halogen/LED bulb within handmade frosted pyrex glass diffuser with OR by 1x E12/14 vintage style LED bulb.

PRODUCT SIZE

SHADE SIZE: 280X315W X 700MM / TOTAL HEIGHT: 990MM

PACKAGING DIMENSIONS

440MM(W) X 440MM(L) X 330MM(H)

LAMP TYPE & NO

1 X G9-HALOGEN 18-40 WATT LAMPS (40W) OR 1X G9-2.5W LEDS. OR 1 X E12/14 // E26/27 LED

CLASS II
IP RATING 20
QC RATING 21

VOLTAGE RANGE
110-240V

PRODUCT MARKS & RATINGS CE

WEIGHT 3KG

PACKED WEIGHT 7KG

TECHNICAL DRAWING

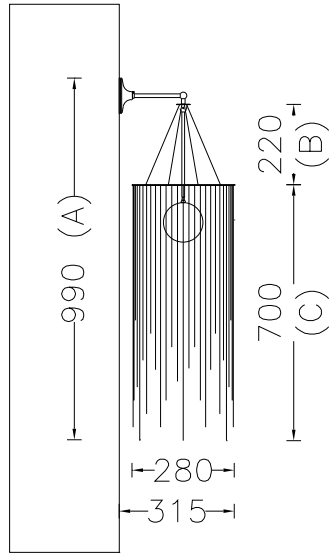

INTERACT

SELECT COLOUR

- SILVER *
- BRASS *
- COPPER *
- SMOKE *
- MIXED METALIC *
- RUST *
- WHITE
- RED
- BLACK

* METALLIC

CUSTOMISE DIMENSIONS

A
B
C

LAMP TYPE

QUANTITY

ADDITIONAL COMMENTS

WEB LINK DOWNLOAD

INDEX

SCALLOPED LOOPED

SCALLOPED LOOPED

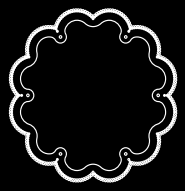

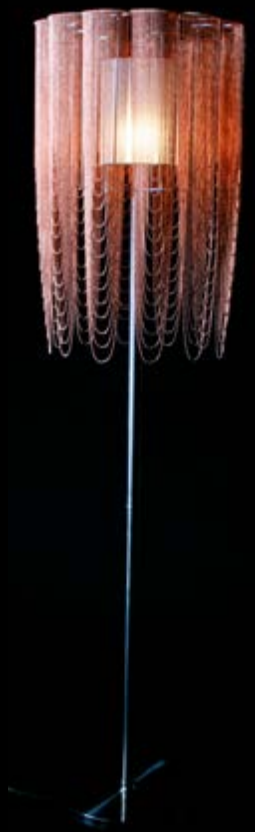

WALL SCONCE

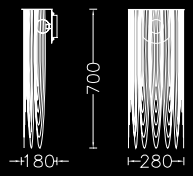

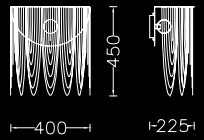

WALL LANTERN

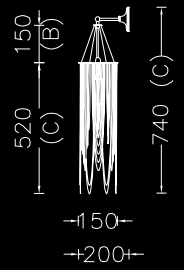

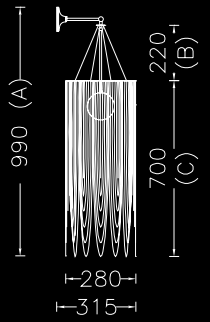

STANDING PENDANT TABLE

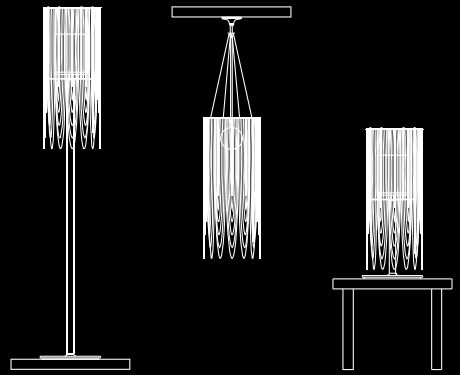

DESCRIPTION

A FAMILY OF SIMPLE CLASSIC SCALLOPED LOOPED-SHAPED PENDANTS, TABLE LAMPS AND STANDING LAMPS. ILLUMINATED BY A PYREX GLASS DIFFUSER CONTAINING A G9-HALOGEN LAMP. AVAILABLE IN THREE DIAMETER SIZES: 150MM, 280MM AND 400MM.

MODEL	SHADE SIZE	TOTAL HEIGHT	
SCALLOPED LOOPED 150 PENDANT LAMP	150W X 350-520H MM	750MM	
SCALLOPED LOOPED 280 PENDANT LAMP	280W X 500-700H MM	1000MM	
SCALLOPED LOOPED 400 PENDANT LAMP	400W X 450-820H MM	900-1250MM	
SCALLOPED LOOPED 150 TABLE LAMP	150W X 350-520H MM	620MM	
SCALLOPED LOOPED 280 TABLE LAMP	280W X 500-700H MM	750MM	
SCALLOPED LOOPED 400 TABLE LAMP	400W X 450-700H MM	750MM	
SCALLOPED LOOPED 150 STANDING LAMP	150W X 350-520H MM	1500MM	
SCALLOPED LOOPED 280 STANDING LAMP	280W X 500-700H MM	1750MM	
SCALLOPED LOOPED 400 STANDING LAMP	400W X 450-700H MM	1750MM	
SCALLOPED LOOPED 280 WALL SCONCE	280 X 180W MM	500-700MM	
SCALLOPED LOOPED 400 WALL SCONCE	400 X 225W MM	200-450MM	
SCALLOPED LOOPED 150 WALL LANTERN	150 X 200W X 350-520MM	740MM	
SCALLOPED LOOPED 280 WALL LANTERN	280 X 315W X 500-700MM	990MM	

SCALLOP LOOPED | SCALLOP LOOPED 150 PENDANT LAMP | SCA-LOOP-150(SML)-PEN

DESCRIPTION

A 150mm Dia. simple classic `scalloped-loop` pendant lamp. Made from lasercut stainless steel frames, chrome plated or lacqured, solid brass components and ballchain in several optional finishes. Illuminated by a pyrex glass ball containing a G9-Halogen or LED lamp.

PRODUCT SIZE

SHADE SIZE: 150W X 350-520H MM / TOTAL HEIGHT: 750MM

PACKAGING DIMENSIONS

220MM(W) X 220MM(L) X 200MM(H)

LAMP TYPE & NO

1 X G9-HALOGEN 18-40 WATT LAMPS (40W) OR 1X G9-2.5W LEDS. OR 1 X E12/14 // E26/27 LED

CLASS II
IP RATING 20
QC RATING 21

VOLTAGE RANGE
115 - 240V

PRODUCT MARKS & RATINGS

WEIGHT 2KG
PACKED WEIGHT 3KG

TECHNICAL DRAWING

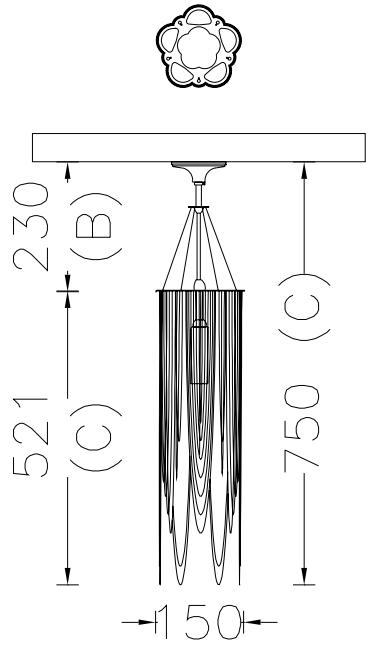

INTERACT

SELECT COLOUR

- SILVER *
- BRASS *
- COPPER *
- SMOKE *
- MIXED METALIC *
- RUST *
- WHITE
- RED
- BLACK

* METALLIC

CUSTOMISE DIMENSIONS

A
B
C

LAMP TYPE

QUANTITY

ADDITIONAL COMMENTS

WEB LINK **DOWNLOAD**

INDEX

SCALLOP LOOPED | SCALLOP LOOPED 280 PENDANT LAMP | SCA-LOOP-280(MED)-PEN

DESCRIPTION

A 280mm Dia. simple classic `scalloped-loop` pendant lamp. Made from lasercut stainless steel frames, chrome plated or lacqured, solid brass components and ballchain in several optional finishes. Illuminated by a pyrex glass ball containing a G9-Halogen or LED lamp.

PRODUCT SIZE

SHADE SIZE: 280W X 500-700H MM / TOTAL HEIGHT: 1000MM

PACKAGING DIMENSIONS

460MM(W) X 460MM(L) X 330MM(H)

LAMP TYPE & NO

1 X G9-HALOGEN 18-40 WATT LAMPS (40W) OR 1X G9-2.5W LEDS. OR 1 X E12/14 // E26/27 LED

CLASS II
IP RATING 20
QC RATING 21

VOLTAGE RANGE
115 - 240V

PRODUCT MARKS & RATINGS

WEIGHT 3KG
PACKED WEIGHT 6KG

TECHNICAL DRAWING

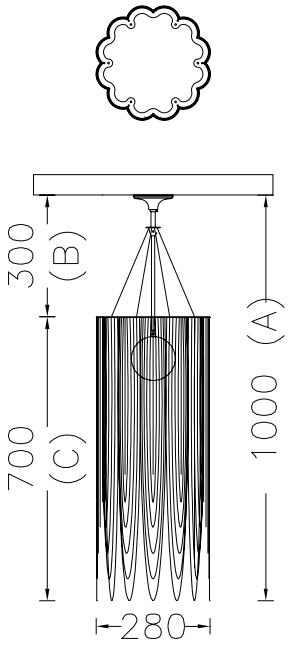

INTERACT

SELECT COLOUR

- SILVER *
- BRASS *
- COPPER *
- SMOKE *
- MIXED METALIC *
- RUST *
- WHITE
- RED
- BLACK

* METALLIC

CUSTOMISE DIMENSIONS

A
B
C

LAMP TYPE

QUANTITY

ADDITIONAL COMMENTS

WEB LINK DOWNLOAD

INDEX

SCALLOP LOOPED | SCALLOP LOOPED 400 PENDANT LAMP | SCA-LOOP-400(LRG)-PEN

DESCRIPTION

A 400mm Dia. simple classic `scalloped-loop` pendant lamp. Made from lasercut stainless steel frames, chrome plated or lacqured, solid brass components and ballchain in several optional finishes. Illuminated by a pyrex glass ball containing a G9-Halogen or LED lamp.

PRODUCT SIZE

SHADE SIZE: 400W X 450-820H MM / TOTAL HEIGHT: 900-1250MM

PACKAGING DIMENSIONS

560MM(W) X 560MM(L) X 330MM(H)

LAMP TYPE & NO

1 X G9-HALOGEN 18-40 WATT LAMPS (40W) OR 1X G9-2.5W LEDS. OR 1 X E12/14 // E26/27 LED

CLASS II
IP RATING 20
QC RATING 21

VOLTAGE RANGE
115 - 240V

PRODUCT MARKS & RATINGS

WEIGHT 4KG

PACKED WEIGHT 9KG

TECHNICAL DRAWING

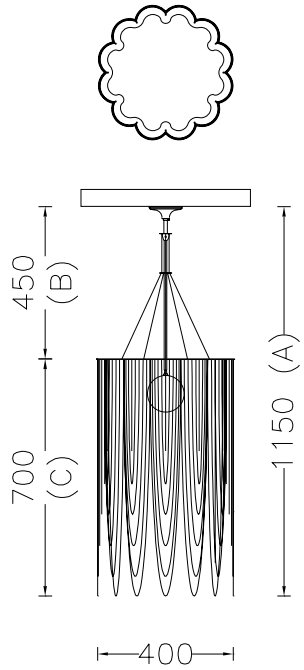

INTERACT

SELECT COLOUR

- SILVER *
- BRASS *
- COPPER *
- SMOKE *
- MIXED METALIC *
- RUST *
- WHITE
- RED
- BLACK

* METALLIC

CUSTOMISE DIMENSIONS

A
B
C

LAMP TYPE

QUANTITY

ADDITIONAL COMMENTS

WEB LINK **DOWNLOAD**

INDEX

SCALLOP LOOPED | SCALLOP LOOPED 150 TABLE LAMP | SCA-LOOP-150(SML)-TBL

DESCRIPTION

A 150mm Dia. simple classic `scalloped-loop` table lamp. Made from lasercut stainless steel frames, chrome plated or lacqured, solid brass components and ballchain in several optional finishes. Illuminated by a pyrex glass ball containing a G9-Halogen or LED lamp.

PRODUCT SIZE

SHADE SIZE: 150W X 350-520H MM / TOTAL HEIGHT: 620MM

PACKAGING DIMENSIONS

300MM(W) X 300MM(L) X 800MM(H)

LAMP TYPE & NO

1 X G9-HALOGEN 18-40 WATT LAMPS (40W) OR 1X G9-2.5W LED

CLASS II
IP RATING 20
QC RATING 21

VOLTAGE RANGE
115 - 240V

PRODUCT MARKS & RATINGS

WEIGHT 3KG

PACKED WEIGHT 7KG

TECHNICAL DRAWING

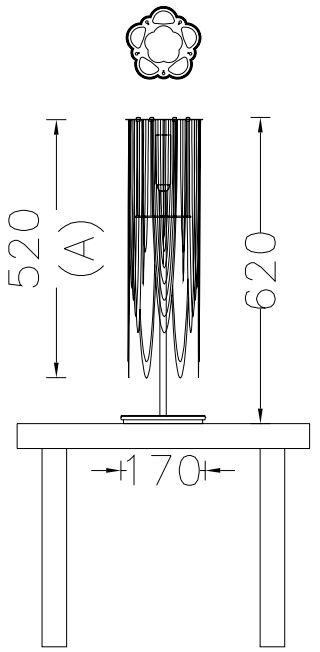

INTERACT

SELECT COLOUR

- SILVER *
- BRASS *
- COPPER *
- SMOKE *
- MIXED METALIC *
- RUST *
- WHITE
- RED
- BLACK

* METALLIC

CUSTOMISE DIMENSIONS

A

LAMP TYPE

QUANTITY

ADDITIONAL COMMENTS

WEB LINK DOWNLOAD

SCALLOP LOOPED | SCALLOP LOOPED 280 TABLE LAMP | SCA-LOOP-280(MED)-TBL

DESCRIPTION

A 280mm Dia. simple classic `scalloped-loop` table lamp. Made from lasercut stainless steel frames, chrome plated or lacqured, solid brass components and ballchain in several optional finishes. Illuminated by a pyrex glass ball containing a G9-Halogen or LED lamp.

PRODUCT SIZE

SHADE SIZE: 280W X 500-700H MM / TOTAL HEIGHT: 750MM

PACKAGING DIMENSIONS

400MM(W) X 400MM(L) X 870MM(H)

LAMP TYPE & NO

1 X G9-HALOGEN 18-40 WATT LAMPS (40W) OR 1X G9-2.5W LEDS. OR 1 X E12/14 // E26/27 LED

CLASS II
IP RATING 20
QC RATING 21

VOLTAGE RANGE
114 - 240V

PRODUCT MARKS & RATINGS CE

WEIGHT 9KG
PACKED WEIGHT 14KG

TECHNICAL DRAWING

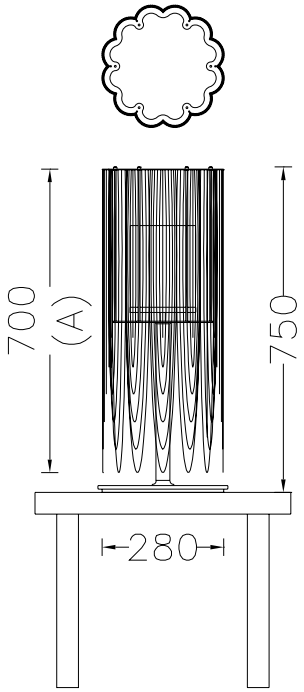

INTERACT

SELECT COLOUR

- SILVER *
- BRASS *
- COPPER *
- SMOKE *
- MIXED METALIC *
- RUST *
- WHITE
- RED
- BLACK

* METALLIC

CUSTOMISE DIMENSIONS

A

LAMP TYPE

QUANTITY

ADDITIONAL COMMENTS

WEB LINK DOWNLOAD

INDEX

SCALLOP LOOPED | SCALLOP LOOPED 400 TABLE LAMP | SCA-LOOP-400(LRG)-TBL

DESCRIPTION

A 400mm Dia. simple classic `scalloped-loop` table lamp. Made from lasercut stainless steel frames, chrome plated or lacqured, solid brass components and ballchain in several optional finishes. Illuminated by a pyrex glass ball containing a G9-Halogen or LED lamp.

PRODUCT SIZE

SHADE SIZE: 400W X 450-700H MM / TOTAL HEIGHT: 750MM

PACKAGING DIMENSIONS

480MM(W) X 480MM(L) X 870MM(H)

LAMP TYPE & NO

1 X G9-HALOGEN 18-40 WATT LAMPS (40W) OR 1X G9-2.5W LEDS. OR 1 X E12/14 // E26/27 LED

CLASS II
IP RATING 20
QC RATING 21

VOLTAGE RANGE
114 - 240V

PRODUCT MARKS & RATINGS CE

WEIGHT 10KG
PACKED WEIGHT 15KG

TECHNICAL DRAWING

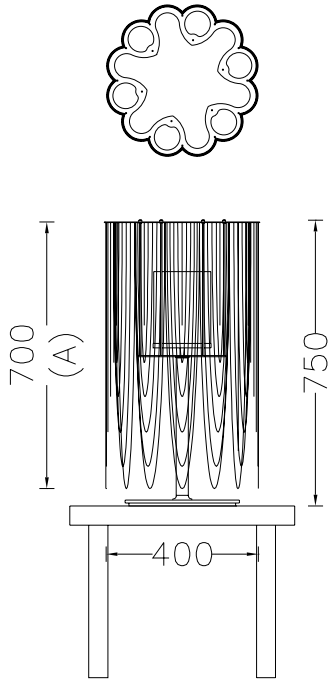

INTERACT

SELECT COLOUR

- SILVER *
- BRASS *
- COPPER *
- SMOKE *
- MIXED METALIC *
- RUST *
- WHITE
- RED
- BLACK

* METALLIC

CUSTOMISE DIMENSIONS

A

LAMP TYPE

QUANTITY

ADDITIONAL COMMENTS

WEB LINK **DOWNLOAD**

INDEX

SCALLOP LOOPED | SCALLOP LOOPED 150 STANDING LAMP | SCA-LOOP-150(SML)-STA

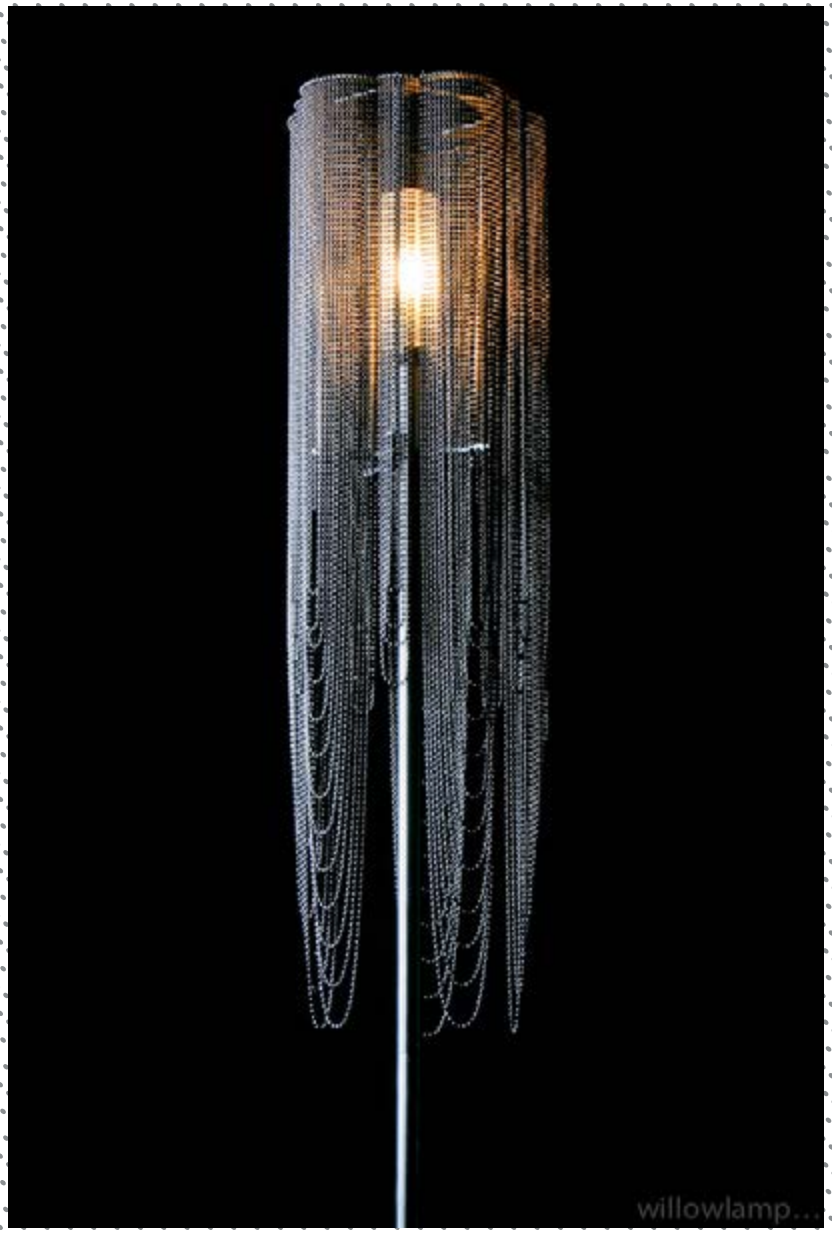

DESCRIPTION

A 150mm Dia. simple classic `scalloped-loop` standing lamp. Made from lasercut stainless steel frames, chrome plated or lacqured, solid brass components and ballchain in several optional finishes. Illuminated by a pyrex glass ball containing a G9-Halogen or LED lamp.

PRODUCT SIZE

SHADE SIZE: 150W X 350-520H MM / TOTAL HEIGHT: 1500MM

PACKAGING DIMENSIONS

300MM(W) X 300MM(L) X 1680MM(H)

LAMP TYPE & NO

1 X G9-HALOGEN 18-40 WATT LAMPS (40W) OR 1X G9-2.5W LED

CLASS II
IP RATING 20
QC RATING 21

VOLTAGE RANGE
114 - 240V

PRODUCT MARKS & RATINGS

WEIGHT 6KG
PACKED WEIGHT 10KG

TECHNICAL DRAWING

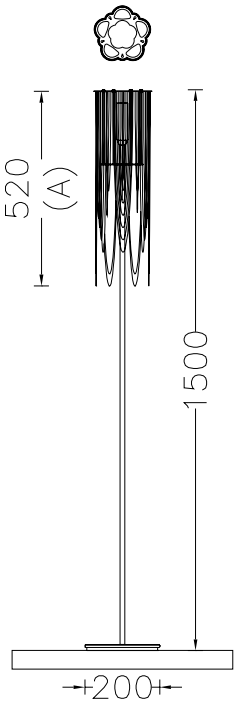

INTERACT

SELECT COLOUR

- SILVER *
- BRASS *
- COPPER *
- SMOKE *
- MIXED METALIC *
- RUST *
- WHITE
- RED
- BLACK

* METALLIC

CUSTOMISE DIMENSIONS

A

LAMP TYPE

QUANTITY

ADDITIONAL COMMENTS

WEB LINK **DOWNLOAD**

INDEX

SCALLOP LOOPED | SCALLOP LOOPED 280 STANDING LAMP | SCA-LOOP-280(MED)-STA

DESCRIPTION

A 280mm Dia. simple classic `scalloped-loop` standing lamp. Made from lasercut stainless steel frames, chrome plated or lacqured, solid brass components and ballchain in several optional finishes. Illuminated by a pyrex glass ball containing a G9-Halogen or LED lamp.

PRODUCT SIZE

SHADE SIZE: 280W X 500-700H MM / TOTAL HEIGHT: 1750MM

PACKAGING DIMENSIONS

400MM(W) X 400MM(L) X 1860MM(H)

LAMP TYPE & NO

1 X G9-HALOGEN 18-40 WATT LAMPS (40W) OR 1X G9-2.5W LEDS. OR 1 X E12/14 // E26/27 LED

CLASS II
IP RATING 20
QC RATING 21

VOLTAGE RANGE
114 - 240V

PRODUCT MARKS & RATINGS

WEIGHT 11KG
PACKED WEIGHT 18KG

TECHNICAL DRAWING

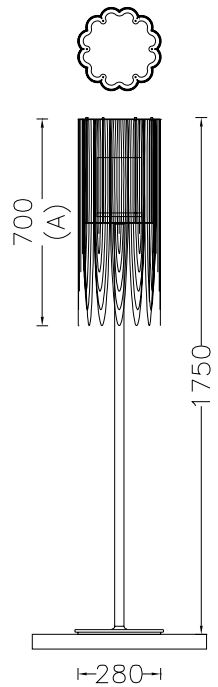

INTERACT

SELECT COLOUR

- SILVER *
- BRASS *
- COPPER *
- SMOKE *
- MIXED METALIC *
- RUST *
- WHITE
- RED
- BLACK

* METALLIC

CUSTOMISE DIMENSIONS

A

LAMP TYPE

QUANTITY

ADDITIONAL COMMENTS

WEB LINK **DOWNLOAD**

INDEX

SCALLOP LOOPED | SCALLOP LOOPED 400 STANDING LAMP | SCA-LOOP-400(LRG)-STA

DESCRIPTION

A 400mm Dia. simple classic `scalloped-loop` standing lamp. Made from lasercut stainless steel frames, chrome plated or lacqured, solid brass components and ballchain in several optional finishes. Illuminated by a pyrex glass ball containing a G9-Halogen or LED lamp.

PRODUCT SIZE

SHADE SIZE: 400W X 450-700H MM / TOTAL HEIGHT: 1750MM

PACKAGING DIMENSIONS

480MM(W) X 480MM(L) X 1860MM(H)

LAMP TYPE & NO

1 X G9-HALOGEN 18-40 WATT LAMPS (40W) OR 1X G9-2.5W LEDS. OR 1 X E12/14 // E26/27 LED

CLASS II
IP RATING 20
QC RATING 21

VOLTAGE RANGE
114 - 240V

PRODUCT MARKS & RATINGS

WEIGHT 14KG
PACKED WEIGHT 24KG

TECHNICAL DRAWING

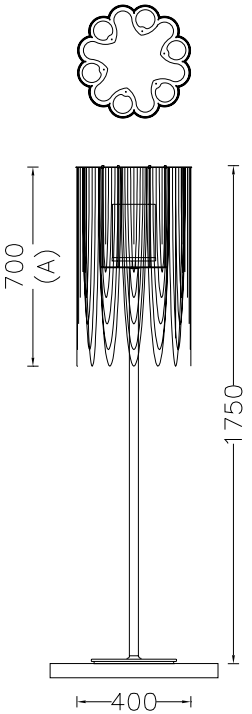

INTERACT

SELECT COLOUR

- SILVER *
- BRASS *
- COPPER *
- SMOKE *
- MIXED METALIC *
- RUST *
- WHITE
- RED
- BLACK

* METALLIC

CUSTOMISE DIMENSIONS

A

LAMP TYPE

QUANTITY

ADDITIONAL COMMENTS

WEB LINK **DOWNLOAD**

INDEX

SIMPLE LAMPS | SCALLOPED LOOPED - WALL SCONCE - 280 | SCA-LOOP-280-WS

DESCRIPTION

An addition to our 'Scalloped Looped' family. This simple elegant wall-sconce based on a metal frame folded in half at 90 degrees. The pattern of the frame above will cast dramatic shadows on the wall above. Illuminated by 1x G9 Halogen/LED bulb within handmade clear or sandblasted pyrex glass ball with OR by 1x E12/14 or E26/27 vintage style LED bulb.

PRODUCT SIZE

SHADE SIZE: 280 X 180W MM / TOTAL HEIGHT: 700MM

PACKAGING DIMENSIONS

440MM(W) X 440MM(L) X 330MM(H)

LAMP TYPE & NO

1 X G9-HALOGEN 18-40 WATT LAMPS (40W) OR 1X G9-2.5W LEDS. OR 1 X E12/14 OR E26/27 LED

CLASS II
IP RATING 20
QC RATING 21

VOLTAGE RANGE
110-240V

PRODUCT MARKS & RATINGS

WEIGHT 2KG
PACKED WEIGHT 5KG

TECHNICAL DRAWING

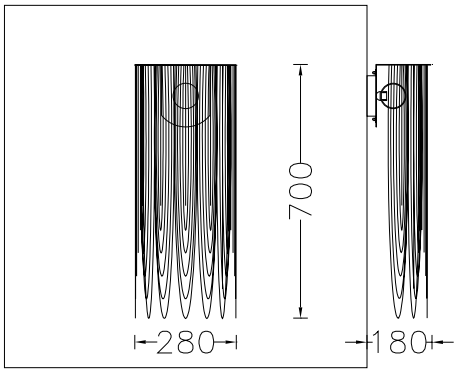

INTERACT

SELECT COLOUR

- SILVER *
- BRASS *
- COPPER *
- SMOKE *
- MIXED METALIC *
- RUST *
- WHITE
- RED
- BLACK

* METALLIC

CUSTOMISE DIMENSIONS

A
B

LAMP TYPE

QUANTITY

ADDITIONAL COMMENTS

WEB LINK DOWNLOAD

INDEX

SIMPLE LAMPS | SCALLOPED LOOPED - WALL SCONCE - 400 | SCA-LOOP-400-WS

DESCRIPTION

An addition to our 'Scalloped Looped' family. This simple elegant wall-sconce based on a metal circular frame folded in half at 90 degrees. The pattern of the frame above will cast dramatic shadows on the wall above. Illuminated by 1x G9 Halogen/LED bulb within handmade clear or sandblasted pyrex glass ball with OR by 1x E12/14 or E26/E27 vintage style LED bulb.

PRODUCT SIZE

SHADE SIZE: 400 X 225W MM / TOTAL HEIGHT: 450MM

PACKAGING DIMENSIONS

330MM(W) X 480MM(L) X 330MM(H)

LAMP TYPE & NO

1 X G9-HALOGEN 18-40 WATT LAMPS (40W) OR 1X G9-2.5W LEDS. OR 1 X E12/14 // E26/27 LED

CLASS II
IP RATING 20
QC RATING 21

VOLTAGE RANGE
110-240V

PRODUCT MARKS & RATINGS CE

WEIGHT 2.5KG
PACKED WEIGHT 6KG

TECHNICAL DRAWING

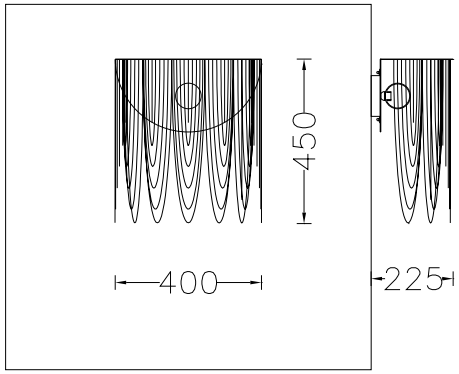

INTERACT

SELECT COLOUR

- SILVER *
- BRASS *
- COPPER *
- SMOKE *
- MIXED METALIC *
- RUST *
- WHITE
- RED
- BLACK

* METALLIC

CUSTOMISE DIMENSIONS

A
B

LAMP TYPE

QUANTITY

ADDITIONAL COMMENTS

WEB LINK DOWNLOAD

INDEX

SIMPLE LAMPS | SCALLOPED LOOPED - WALL LANTERN - 150 | SCA-LOOP-150-WL

DESCRIPTION

An addition to our 'Scalloped Looped' family in the 'Basic Lamps' collection - This simple elegant wall-lantern is identical to its pendant counterpart except it is mounted onto the wall instead of the ceiling. Illuminated by 1x G9 Halogen/LED bulb within handmade frosted pyrex glass diffuser with OR by 1x E12/14 vintage style LED bulb.

PRODUCT SIZE

SHADE SIZE: 150X200W X 520MM / TOTAL HEIGHT: 740MM

PACKAGING DIMENSIONS

310MM(W) X 310MM(L) X 310MM(H)

LAMP TYPE & NO

1 X G9-HALOGEN 18-40 WATT LAMPS (40W) OR 1X G9-2.5W LEDS. OR 1 X E12/14 // E26/27 LED

CLASS II
IP RATING 20
QC RATING 21

VOLTAGE RANGE
120-240V

PRODUCT MARKS & RATINGS CE

WEIGHT 1.3KG
PACKED WEIGHT 4KG

TECHNICAL DRAWING

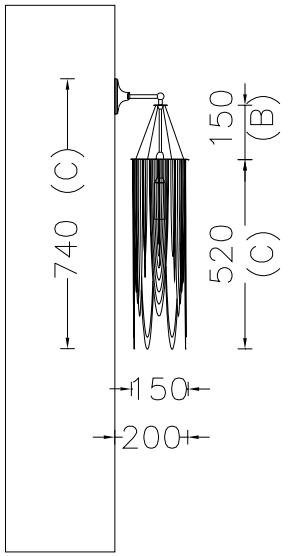

INTERACT

SELECT COLOUR

- SILVER *
- BRASS *
- COPPER *
- SMOKE *
- MIXED METALIC *
- RUST *
- WHITE
- RED
- BLACK

* METALLIC

CUSTOMISE DIMENSIONS

A
B
C

LAMP TYPE

QUANTITY

ADDITIONAL COMMENTS

WEB LINK DOWNLOAD

INDEX

SIMPLE LAMPS | SCALLOPED LOOPED - WALL LANTERN - 280 | SCA-LOOP-280-WL

DESCRIPTION

An addition to our 'Scalloped Looped' family in the 'Basic Lamps' collection - This simple elegant wall-lantern is identical to its pendant counterpart except it is mounted onto the wall instead of the ceiling. Illuminated by 1x G9 Halogen/LED bulb within handmade frosted pyrex glass diffuser with OR by 1x E12/14 vintage style LED bulb.

PRODUCT SIZE

SHADE SIZE: 280X315W X 700MM / TOTAL HEIGHT: 990MM

PACKAGING DIMENSIONS

440MM(W) X 440MM(L) X 330MM(H)

LAMP TYPE & NO

1 X G9-HALOGEN 18-40 WATT LAMPS (40W) OR 1X G9-2.5W LEDS. OR 1 X E12/14 OR E26/27 LED

CLASS II
IP RATING 20
QC RATING 21

VOLTAGE RANGE
110-240V

PRODUCT MARKS & RATINGS CE

WEIGHT 3KG
PACKED WEIGHT 7KG

TECHNICAL DRAWING

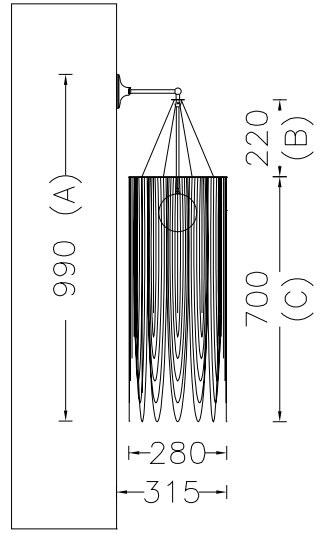

INTERACT

SELECT COLOUR

- SILVER *
- BRASS *
- COPPER *
- SMOKE *
- MIXED METALIC *
- RUST *
- WHITE
- RED
- BLACK

* METALLIC

CUSTOMISE DIMENSIONS

A
B
C

LAMP TYPE

QUANTITY

ADDITIONAL COMMENTS

WEB LINK DOWNLOAD

INDEX

DOWNLIGHTER 'RETRO-FITS'

DOWNLIGHTER 'RETRO-FITS'

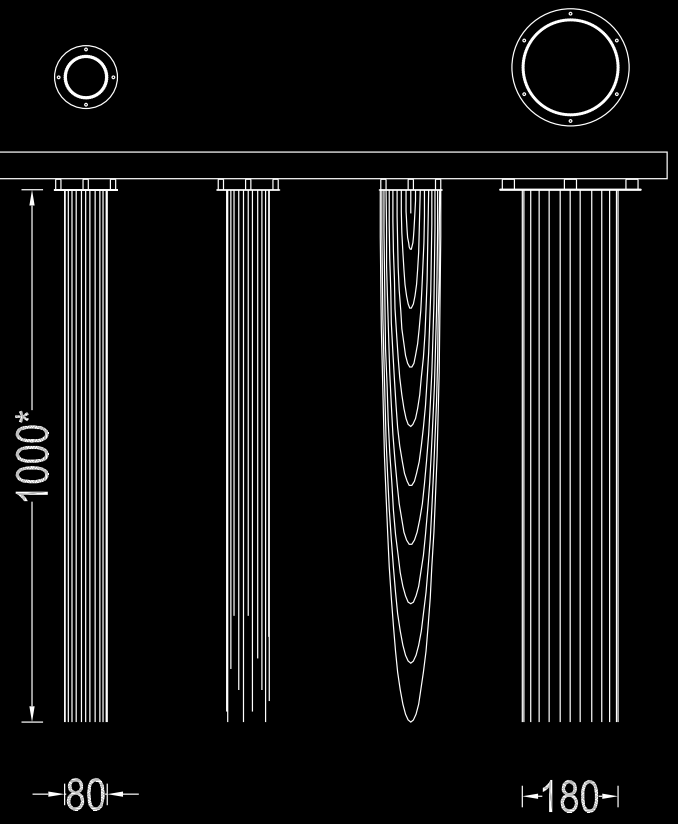

DESCRIPTION

A FAMILY OF SIMPLE CLASSIC LAMPSHADES, SOLD AS 'SHADE-ONLY' TO BE RETROFITTED AROUND HALOGEN CEILING DOWNLIGHTS. THE LENGTH AND EDGE TYPE MAY BE SPECIFIED AND TAILORED TO SPECIFIC CUSTOMER REQUIREMENTS. PRICED PER METER. AVAILABLE IN THREE STYLES: CIRCULAR CROPPED, CIRCULAR WILLOW AND CIRCULAR POD, AND IN TWO DIAMETER SIZES: 80MM OR 180MM.

MODEL	SHADE SIZE	TOTAL HEIGHT	
DOWNLIGHTER RETROFIT 80	80W X 1000H MM	PRICED PER METER	
DOWNLIGHTER RETROFIT 180	180W X 1000H MM	PRICED PER METER	

INDEX

DOWNLIGHTER `RETRO-FITS` | DOWNLIGHTER RETROFIT - 80 | DR-80

DESCRIPTION

A 80mm Diam. `retro-fit` lampshade, sold as `shade-only` to fit onto ceilings around Halogen downlights lights. The length and edge type may be specified and tailored to specific customer requirements and is priced per meter. Available in 3 styles, `circular-cropped`, `circular-willow` & `circular-pod`

PRODUCT SIZE

SHADE SIZE: 80W X 1000H MM (PRICED PER METER)

PACKAGING DIMENSIONS

150MM(W) X 150MM(L) X 120MM(H)

LAMP TYPE & NO

NONE (SHADE ONLY)

CLASS N/A
IP RATING N/A
QC RATING N/A

VOLTAGE RANGE
N/A

PRODUCT MARKS & RATINGS

WEIGHT 1KG

PACKED WEIGHT 2KG

TECHNICAL DRAWING

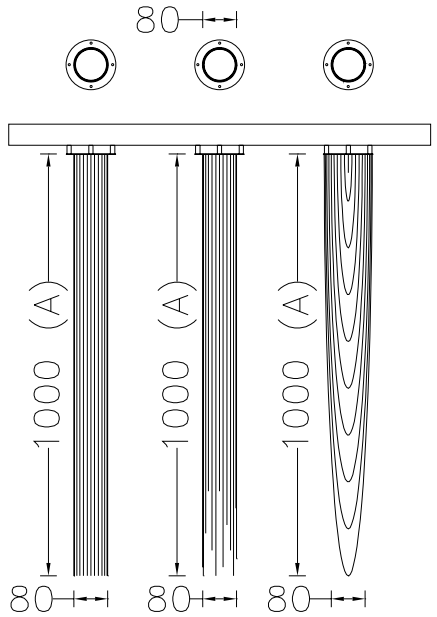

INTERACT

SELECT COLOUR

- SILVER *
- BRASS *
- COPPER *
- SMOKE *
- MIXED METALIC *
- RUST *
- WHITE
- RED
- BLACK

* METALLIC

CUSTOMISE DIMENSIONS

A

LAMP TYPE

QUANTITY

ADDITIONAL COMMENTS

WEB LINK DOWNLOAD

DOWNLIGHTER `RETRO-FITS` | DOWNLIGHTER RETROFIT -180 | DR-180

DESCRIPTION

A 180mm Diam. `retro-fit` lampshade, sold as `shade-only` to fit onto ceilings around Halogen downlights lights. The length and edge type may be specified and tailored to specific customer requirements and is priced per meter. Available in 3 styles, `circular-cropped`, `circular-willow` & `circular-pod`

PRODUCT SIZE

SHADE SIZE: 180W X 1000H MM (PRICED PER METER)

PACKAGING DIMENSIONS

220MM(W) X 220MM(L) X 200MM(H)

LAMP TYPE & NO

NONE (SHADE ONLY)

CLASS N/A
IP RATING N/A
QC RATING N/A

VOLTAGE RANGE
N/A

PRODUCT MARKS & RATINGS

WEIGHT 3.5KG

PACKED WEIGHT 5KG

TECHNICAL DRAWING

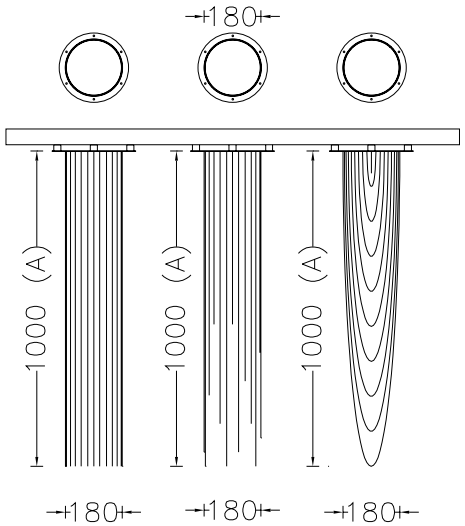

INTERACT

SELECT COLOUR

- SILVER *
- BRASS *
- COPPER *
- SMOKE *
- MIXED METALIC *
- RUST *
- WHITE
- RED
- BLACK

* METALLIC

CUSTOMISE DIMENSIONS

A

LAMP TYPE

QUANTITY

ADDITIONAL COMMENTS

WEB LINK DOWNLOAD

INDEX

CHOOSE THE PERFECT WILLOWLAMP TO SUIT YOUR LIFESTYLE

Commission us to **custom design** your own willowlamp to suit your individual taste and lifestyle or choose from our **standard collection**.

Our standard collection is divided into four main groupings: Lamps, Pendants, Chandeliers and Art Forms.

Each willowlamp is available in different finishes, and we can tailor the height and length of the pendants and chandeliers to suit your space. See our colour bar or willowlamp.com for more detail.

'Flat-Pack' Benefits: Every willowlamp is flat-packed and shipped in special, environmentally-friendly packing crates. Flat-pack shipping significantly reduces costs. It is an experience in itself to see the beautiful piece unfolding out of its packaging

Support, Service and Logistics: We aim to deliver customer service that is as outstanding as our designs. The willowlamp mark means not only attention to detail, but personal attention, too.

Standard Finishes & Colours:

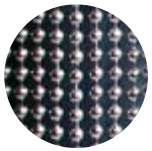
SILVER (CHROME)

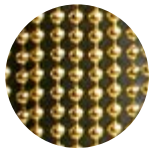
BRASS

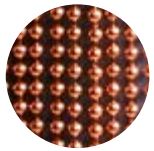
COPPER

SMOKE

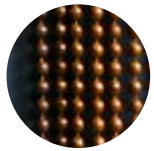
RUST

WHITE

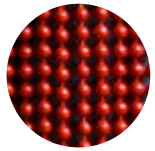
RED

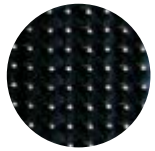
BLACK

← INDEX

OUR AGENTS AND SALES PARTNERS

We are represented around the world by a network of willowlamp agents and trading partners. Contact the agent in your region or our head office listed, for more information about willowlamp. We are always seeking new agents and trading partners to help us expand into new markets. This is a part of our sustainable business growth strategy. If you have an in-depth understanding of your market and have the skills and experience to help expand our customer base, please contact us to discuss how we can work together.

UNITED KINGDOM
Cameron Peters Fine Lighting Ltd
Home Farm, Ardington, Wantage, OX12 8PD, England
tel +4 4 (0)1235 835000 I fax +44(0)1235 835005
contact@cameronpeters.co.uk I www.cameronpeters.co.uk

AUSTRALIA
Emily Ziz Style Studio
38B Gurner Street, Paddington, NSW, 2021
tel 02 9380 4180 I fax 02 8587 0009
info@emilyziz.com I www.emilyziz.com

GERMANY - AUSTRIA - SWITZERLAND
african avantgarde
Cathrin Hennicke
Sebastianstr. 38, 53115 Bonn
tel: +49 228 240 22974
ch@african-avantgarde.de I www.african-avantgarde.de

SOUTH AFRICA
willowlamp Head Office Factory and Sales:
6 Spencer Square, 6 Spencer Street, Salt River, Cape Town
tel +27 (0)21 447 8529 I fax +27 (0)86 512 9930
info@willowlamp.com I www.willowlamp.com

Johannesburg Showroom:
Glo Lighting And Living
27 6th St, Parkhurst, 2193, Johannesburg
tel +27 (0)11 447 3667 I fax +27 86 574 2214

Durban Showroom:
Light And living
Unit 5, Beacon Rock,
21 Lighthouse Rd, Umhlanga 4320
+27 (0)31 561 1408 or +27 (0)82 856 3404

Agent details are correct at the time of going to print and may change.
Visit willowlamp.com for an updated contact list of agents in your area.

THE TEAM THAT BRINGS WILLOWLAMP TO LIFE

The willowlamp notch was patented in 2007. Since then, we have built a reliable team of trading partners, specialist industrial suppliers and in-house professionals whose work and skill are vital to willowlamp's success.

Our industrial partners deliver precision laser-cut, machined and finished components. This enables our factory team to hand-assemble each willowlamp with meticulous attention to detail in our immaculate, highly organised and creative space. We also have a broad network of internationally connected, active marketing and sales specialists whose role is to embed willowlamp firmly on the global design stage.

Our professional in-house support team ensures that willowlamp is shipped with care to our clients all over the world.

← INDEX

AWARDS AND COLLABORATIONS

We have had the privilege of participating in some of the leading design exhibitions that celebrate outstanding creativity in product design. We have also won globally prestigious design awards.

AWARDS:

2019: LIT Awards: 'Designer and Custom Lighting' for the Southern Flame - winner
2019: LIT Awards: 'Chandeliers' for Giant Fuschia - winner
2019: D'Ark Award 'KIT for the Halo 3rd place
2019: D'Ark Award 'Bespoke Installation' for Giant Fuschia 3rd place
2017: Guild Foundation Award 'Object that moves' category
2016: D'Ark Award 'Hospitality' 2nd place
2014: 100% Design Johannesburg best lighting award
2009: SABS design excellence award
2008: Elle Décor overall designer of the year award
2007: Elle Décor lighting designer of the year
2006: Elle Décor lighting designer of the year

RETROSPECTIVE EXHIBITIONS:

2019: 15 year Retrospective Exhibition – Willowlamp factory, Cape Town
2011: Arts on Main collaboration, Johannesburg
2010: 'Global Africa Project' Museum of Arts & Design, New York **

INVITATIONS AND PARTICIPATION:

2019: Euroluce, Salon de Mobile, Milan Italy – willowlamp solo exhibition
2018: Design Days Dubai, willowlamp in collaboration with 'Brandkonnect' & 'Indigenus'
2018: Launch of 2018 collection, Youngblood Gallery Cape Town
2018: Salon of Art & Design – Invited by Southern Guild* showcased 'Southern Flame'
2018: 'Extra-Ordinary' – Invited by Southern Guild* showcased 'Southern Flame'
2017: 100% Design Johannesburg – willowlamp and Meyer Von Weilligh
2015: 100% Design Johannesburg – willowlamp and Meyer Von Weilligh
2014: Light Junction, London
2014: 100% Design London – invited by Cape Craft and Design Institute
2014: 100% Design Johannesburg – willowlamp and John Vogel
2013: Art Basel – invited by Southern Guild*
2012: Design days, Dubai – invited by Southern Guild*
2011: The Johannesburg Art Fair, Johannesburg – invited by Southern Guild*
2011: Invited to exhibit in the Salon Privé at Design Indaba, Cape Town
2010: ICFF, New York - invited by the Amaridian Gallery
2009: The Johannesburg Art Fair, Johannesburg – invited by Southern Guild*
2009: Ambiente, Frankfurt – invited by the South African Dept. of Trade and Industry
2008: Maison and Objet, Paris – invited by the Rosita Gallery
2007: ICFF, New York – invited by the Amaridian Gallery

* Southern Guild is an exhibition of South African artists, designers and crafts people that travels to art and design shows across the globe.
** The 'Global Africa Project' was a travelling exhibition that started its life at the Museum of Arts and Design in New York. This significant exhibition showcased design originating from Africa with the aim of correcting stereotypes about the level of art, craft and design from the continent.

← INDEX

INDEX
287